Condensate Manual

Engineering steam performance

GESTRA Condensate Manual

Preface The publication of the fifteenth revised edition of the Condensate Manual underlines the continuing importance of the subject matter. The contents have been brought up to date and adapted to reflect our current product range, and new developments are also presented.

This handbook draws on many decades of practical experience in the field of steam and condensate systems. The main subjects are therefore the choice of steam trap best suited for a particular application and descriptions of typical steam users with their requirements for effective process-compatible condensate discharge. We have added installation examples, schematics, tables and charts for pipeline and trap sizing, and give hints on the best layout and operation of steam/condensate systems.

The handbook cannot answer every question, however; should you come across such a problem, please do not hesitate to contact GESTRA in Bremen directly.

1st Edition 1980
2nd Revised Edition 1982
3rd Revised Edition 1986
4th Revised Edition 1987
5th Revised Edition 1991
6th Revised Edition 1995
7th Revised Edition 2003
8th Revised Edition 2004
9th Revised Edition 2005
10th Revised Edition 2008
11th Revised Edition 2010
12th Revised Edition 2012
13th Revised Edition 2014
14th Revised Edition 2019
15th Revised Edition 2022

Page

Table of Contents

	Abbreviations	4
1.	Steam Traps	9
2.	Basic Principles of Steam Trapping (with Examples)	27
3.	Selection of Steam Traps	40
4.	The Most Important Heat Exchangers - Application Examples (Selecting the Most Suitable Steam Trap)	43
5.	Monitoring of Steam Traps	83
6.	Using the Sensible Heat of the Condensate	91
7.	Air-Venting of Heat Exchangers	94
8.	Condensate Return Systems	95
9.	Drainage of Compressed Air Plants	99
10.	Sizing of Condensate Lines	107
11.	Sizing of Steam Lines	117
12.	Calculation of Condensate Flowrates	118
13.	Pressure and Temperature Control	125
14.	The Advantageous Use of Non-Return Valves	133
15.	Check Valves	137
16.	Valves for Special Purposes	141
	Symbols for Thermal Power Plants	151
	International Symbols and Abbreviations	155
	Material Designations	156
	Index	158

Abbreviations

The following abbreviations are used in the various chapters for the full designations of the corresponding GESTRA equipment:

AK	GESTRA automatic drain valve for start-up drainage
BK	GESTRA Bimetallic steam trap BK Thermostatic/thermodynamic steam trap with bimetallic regulator
MK	GESTRA steam trap Flexotherm MK. Thermostatic trap with GESTRA membrane regulator
DK	Thermodynamic steam trap
UNA Duplex	GESTRA float trap UNA with thermostatic bellows or capsule for automatic air-venting
UNA Simplex	GESTRA float trap UNA without thermostatic element
GK	GESTRA Super steam trap GK. Thermodynamic steam trap with stage nozzle
RK	GESTRA DISCO non-return valve in wafer design
TK	GESTRA Super steam trap TK. Thermostatic steam trap with thermostatic pilot control by GESTRA membrane regulators
TD	GESTRA mechanical drier for steam
TP	GESTRA mechanical drier and purifier for compressed air and gases
UBK	GESTRA steam trap UBK. Thermostatic trap for condensate discharge without flashing
UNA	GESTRA float steam trap UNA

VK	GESTRA Vaposcope. Sightglass as flow indicator
VKP	GESTRA VAPOPHONE: Ultrasonic detector for monitoring steam traps for loss of live steam
VKP-Ex	GESTRA VAPOPHONE: Ultrasonic detector for monitoring steam traps for loss of live steam (Ex protected)
VKE	GESTRA test set for monitoring steam traps
ZK	GESTRA control valve with radial-stage nozzle
H capsule	GESTRA thermostatic capsule for opening temperatures 5 K below saturation temperature
N capsule	GESTRA thermostatic capsule for opening temperatures 10 K below saturation temperature
U capsule	GESTRA thermostatic capsule for opening temperatures 30 K below saturation temperature

Page

1. Steam Traps

1.1	Evaluation Criteria	9
1.2	The Various Steam-Trap Systems of GESTRA	12
1.2.1	Thermostatic/thermodynamic steam traps with bimetallic regulator, BK range	12
1.2.2	Thermostatic steam traps with GESTRA membrane regulator, MK range	14
1.2.3	Rhombusline is more than just a new family of GESTRA steam traps	15
1.2.4	Thermostatic steam traps for very high flowrates, TK range	17
1.2.5	Thermostatic steam traps for condensate discharge without flash steam, UBK range	17
1.2.6	Ball float traps, UNA range	18
1.2.7	Thermodynamic steam traps, DK range	19
1.2.8	Thermodynamic steam traps with stage nozzle, GK range, and with radial stage nozzle, ZK range	20
1.2.9	New drainage systems for use in power stations	21

1. Steam Traps

1.1 Evaluation Criteria

There is no such thing as a universal steam trap that is suitable for all operating conditions. Depending on the particular application, one or the other system will offer the optimum solution. The following criteria, amongst others, should be considered when selecting the most suitable steam trap:

- its control characteristics and flowrate capacity, depending on the application either singly (e.g. use for large pressure ranges, for large pressure fluctuations, for large flowrates, or for large flowrate fluctuations) or jointly (e.g. for large fluctuations in flowrate and pressure);
- its ability to vent itself and the plant;
- the possibilities provided for installation and maintenance; and
- its service life; its suitability for back pressure etc. (see Fig. 1).

The most important technical criteria for evaluation, together with the corresponding assessment of the steam trap types manufactured by GESTRA, are summarized in Fig. 2.

Properties of the Steam Trap

Basic requirements

Discharging the required quantity of condensate without loss of live steam
Automatic air-venting

Additional requirements

No impairment of the heating process, no banking-up
Utilization of the sensible heat of the condensate by holding it back

Universal application
- Large pressure range
- Works with a large range of back-pressures
- Wide range of flowrates
- Accommodates large fluctuations in flowrate and pressure
- For controlled installations

Low effort
- Easy installation
- Minimum maintenance
- Corrosion-resistant
- Unaffected by dirt
- Can withstand freezing
- Resistant to waterhammer
- Long service life
- As few variants as possible

Fig. 1

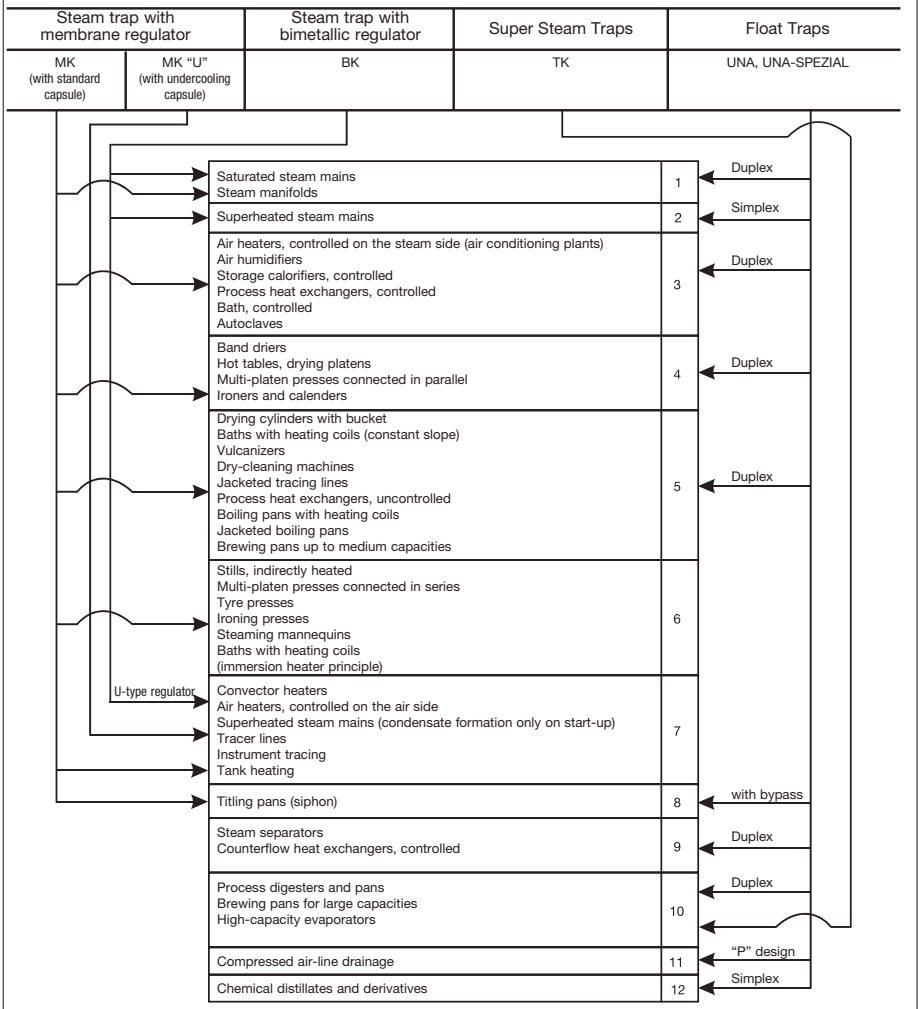

1. Float trap – Duplex / MK / BK
2. Float trap – Simplex / BK
3. Float trap – Duplex / MK
4. Float trap – Duplex / MK
5. Float trap – Duplex / MK
6. MK
7. MK "U" / BK "U" (undercooling)
8. Float trap – Duplex with bypass / MK
9. Float trap – Duplex
10. Float trap – Duplex / TK
11. Float trap – "P" design
12. Float trap – Simplex

Fig. 2 Steam trap selection table

Important Criteria for the Evaluation

1.1.1 A large and heavy steam trap, which can also lose a considerable amount of heat by radiation, requires brackets or supports for which the manufacturing costs may reach or even exceed the capital outlay for the trap.

1.1.2 A poorly vented and incompletely drained heat exchanger leads to longer heating times, and hence to higher manufacturing costs for the product or to uneven heating of the product, which in turn results in prolongation of the required heating periods (added production costs) or in waste (increase in the reject rate) (see Fig. 3).

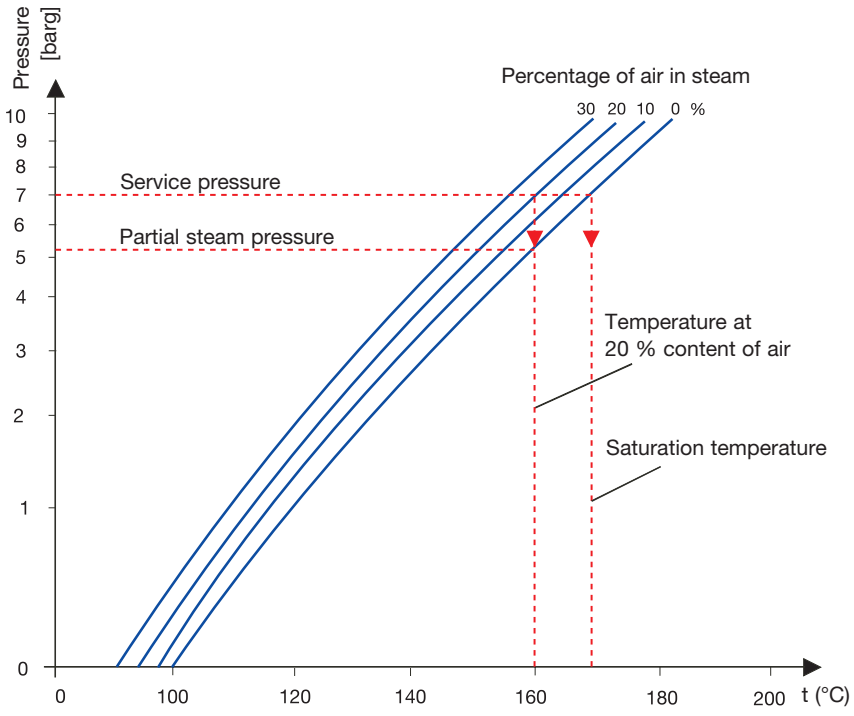

Fig. 3 **Partial pressure of the steam and the corresponding saturated temperature as a function of the pressure for various percentages of air in steam.**

1.1.3 Certain types of steam traps inherently blow off some steam, even when new. It is possible for the cost of the energy loss to exceed the purchase price of the trap within only a few months of operation. All steam traps operating according to the thermodynamic principle (e.g. the thermodynamic disc-type traps) and inverted-bucket traps will always waste a certain amount of steam.

1.1.4 Exploiting the sensible heat of the condensate in the heating space by using a suitable steam trap can yield considerable savings in energy (undercooling).

1.1.5 Freezing of the traps and the condensate piping in outside installations can cause serious disturbances in production.

1.1.6 In the long run, using a cheap, non-repairable steam trap will require more effort in terms of time and money than a more expensive trap that can be removed and repaired.

1.1.7 The use of only a few trap types with wide applications throughout the plant will reduce costs, thanks to simplified stock-keeping as well as quick repair and maintenance by staff who are familiar with the traps.

1.2 The Various Steam-Trap Systems of GESTRA

have been developed to meet the special needs and expectations of the plant operators. Both technical requirements and economical considerations are always kept in mind.

1.2.1 Thermostatic/thermodynamic steam traps with bimetallic regulator, BK range (Fig. 4).

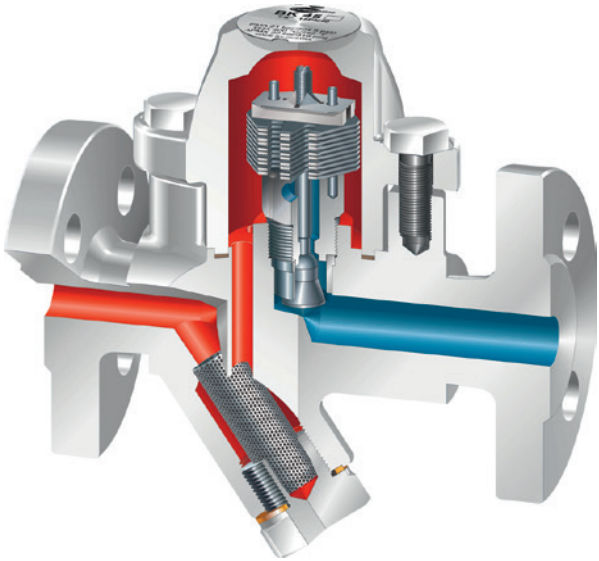

Fig. 4 GESTRA steam trap BK

Condensate discharge is controlled by the regulating element of the trap as a function of pressure and temperature. The trap opens at a slight undercooling and closes before saturation temperature is reached.

The high-lift effect (a thermodynamic process) produces the instantaneous opening of the trap and a consequently high hot-water capacity (see Fig. 5).
The discharge temperature of the condensate can be varied by using a regulator adjusted for undercooling. An increase in the condensate undercooling, provided the heating process permits, will lead to heat savings, whereas a reduced undercooling may lead to faster and more even heating.

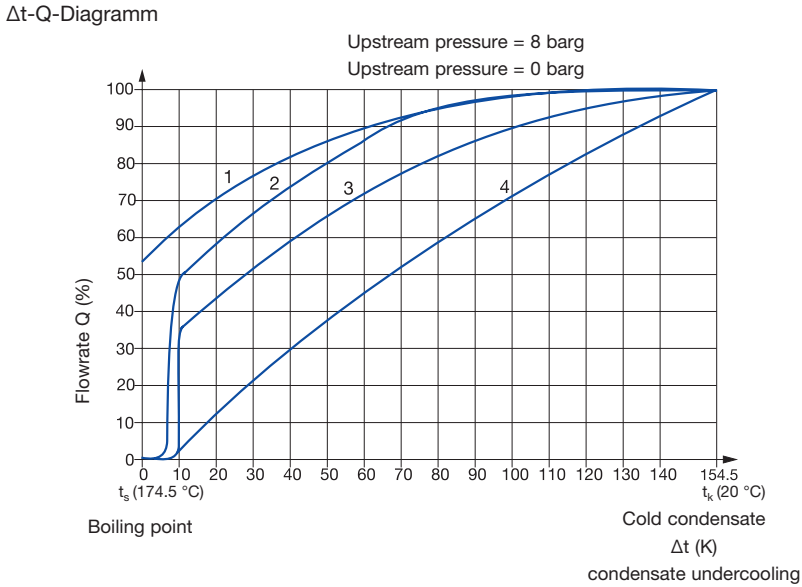

Fig. 5 **Opening curves of various steam traps**
Curve 1 – UNA Curve 3 – BK 45 with high lift effect
Curve 2 – MK Curve 4 – bimetallic, with round regulating plates

Features of the BK range:
- More resistant to waterhammer, aggressive condensate and freezing; Robust regulator proven a million times over
- Stage nozzle with non-return valve action
- Automatic air-venting
- Available for all pressures and temperatures. Trap with long service life

A point to consider:
The condensate undercooling required for opening increases with rising back-pressure.

1.2.2 Thermostatic steam traps with GESTRA membrane regulator, MK range (Fig. 6)

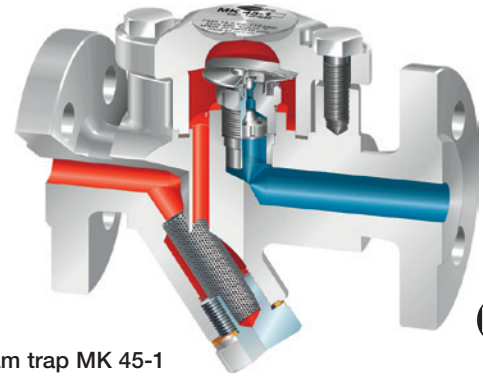

Fig. 6
GESTRA steam trap MK 45-1

Condensate discharge is controlled by the membrane regulator, a vapour-expansion thermostat, as a function of temperature. The control characteristic of the trap practically follows the saturated steam curve, and gives more accurate control than any other thermostatic trap (see Fig. 5). Owing to the unusually sensitive response and the instant reaction to changes in temperature, the MK traps are particularly suited for heat exchangers where slight banking-up of condensate does not impair the heating process, such as vulcanizing presses, ironing presses and laboratory equipment.
Two different capsules are available for the membrane regulator:

- “N” (normal) capsule for condensate discharge practically without any banking-up. Discharge temperature approx. 10 K below saturation temperature.
- “U” (undercooling) capsule for additional savings in energy (utilization of the sensible heat through banking-up in the heating surface, reduction of the amount of flash steam). Discharge temperature approx. 30 K below saturation temperature.

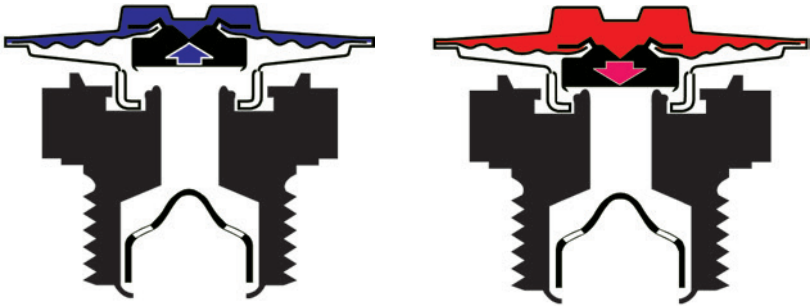

Fig. 6a Function of the GESTRA membrane regulator with flat seat

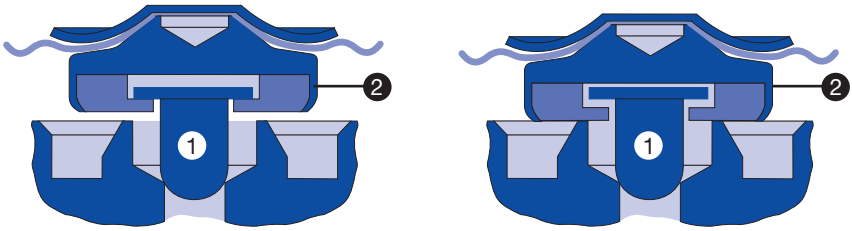

During plant operation
Seat 1 closes (regulator is pushed to the closed position)

Trap closed
Both seats are tightly shut off

Fig. 6b **Function of the GESTRA membrane regulator with tandem shut-off**
The self-centering valve cone ensures steamtight closure. With rising temperatures, the additional flat seat closes too and provides a further guarantee of tightness, even in the presence of dirt particles. Moreover, the pressure drop over two stages reduces wear and enhances the life of the trap.

Operation of the GESTRA membrane regulator
Opening: The capsule of the membrane regulator is filled with a liquid having an evaporation temperature which is just slightly below the saturation temperature of water. During shut-down or start-up of the plant, i.e. if cold condensate is present, the liquid filling is completely condensed, owing to the low ambient temperature. The pressure in the capsule is lower than the surrounding pressure (service pressure); the membrane with the valve disc is pushed in the opening direction.
Closing: With rising condensate temperature, the liquid filling starts to evaporate. The pressure in the capsule rises; the membrane with the valve disc is moved in the closing direction. Just before the condensate has reached its saturation temperature, the trap is closed completely.
Features:
- Operation is unaffected by back pressure. The capsule is corrosion-resistant and practically impervious to waterhammer.
- Readjustment of the regulator is not possible (it is also unnecessary), which prevents steam losses as a result of tampering.
- Automatic air-venting.
- Thermostatic steam trap with the best control characteristic.
- For small condensate flowrates, the capsule with tandem shut-off (dual seat) is recommended.
- For larger condensate flowrates, use the “H” capsule for condensate discharge practically without any banking-up (average discharge temperature is 5 K below the corresponding boiling point of the condensate).

Various regulators with flat seat are available for this purpose:
Depending on the condensate flowrate, with 1, 2, 3, 4 or 9 flat-seat membranes.

1.2.3 RHOMBUS*line* is more than just a new family of GESTRA steam traps

The wide-ranging experience gained with the proven BK 15 steam traps resulted in an optimization of the traps for the new RHOMBUSline.
A patented bimetallic plate arrangement in the regulator of the BK 45, consisting of a plate stack, reacts much faster than the previous version to parameter changes in the steam and in condensate lines.

Benefits of the RHOMBUS*line* traps:

1. The new regulator reacts more quickly to changes in the influencing factor steam/condensate (BK 45).
2. The shape of the RHOMBUSline casing permits the use of standard flange connecting bolts, for both the trap casing and the counter-flanges.
3. It is no longer necessary to exchange the gasket between cover and casing every time the cover is removed from the trap.
4. The trap cover is mounted with only two bolts instead of four.
5. The Y-shaped strainer (with large filtering area for separating out impurities) simplifies the strainer cleaning process.
6. The sealing of the regulator (base bushing pressed into the casing) prevents internal leaks.
7. Retightening of the bolts after the initial commissioning is no longer required.
8. The overall length complies with the applicable codes.
9. Maintenance of the traps is simplified.

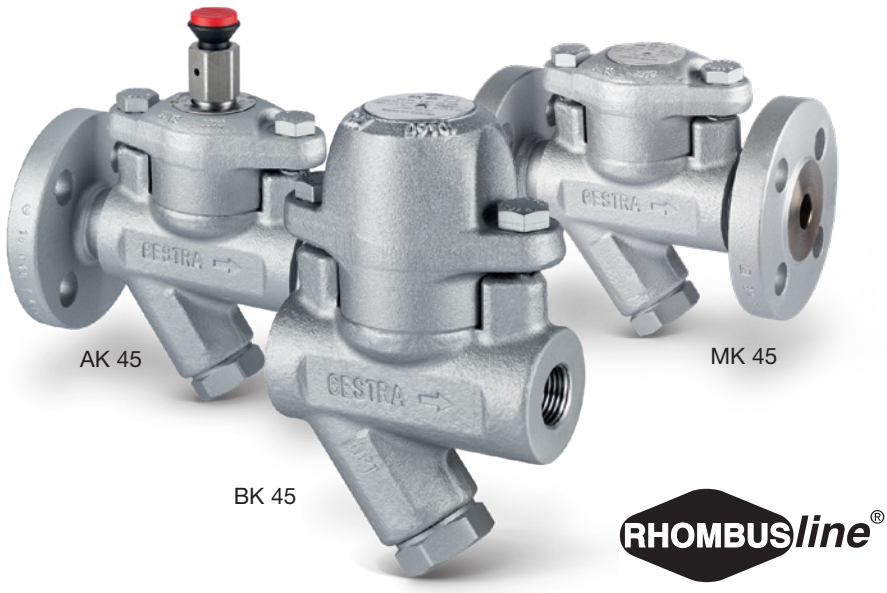

Fig. 7a RHOMBUSline steam traps

1.2.4 Thermostatic pilot-operated steam traps for very high flowrates, TK range (Fig. 7b)

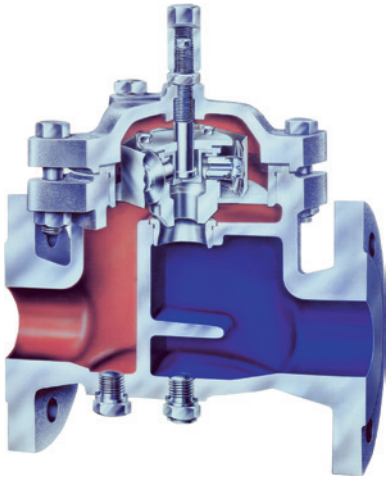

Fig. 7b GESTRA Super steam trap TK 23/24 DN 50

The control element consists of a thermostatic pilot control with GESTRA membrane regulators and a main valve. The regulating characteristic of the TK traps is largely similar to that of the MK traps, where the valve is directly operated by the membrane regulator.

Features:

- Easy to install in spite of large flowrate: overall length corresponding to DIN standards for valves, low weight, installation in any position (preferably horizontal).
- Automatic air-venting, unaffected by dirt and aggressive condensate.

1.2.5 Thermostatic steam traps for condensate discharge without flash steam, UBK range.

This steam trap is a special version of the BK range (see Fig. 5). With the factory setting, the condensate discharge temperature is < 100 °C for pressures up to 19 barg (275 psig) and < 116 °C for pressures up to 32 barg (465 psig).

The UBK traps are suitable for all applications where banking-up of condensate does not impair the heating process. A typical case is steam tracing with condensate discharge to atmosphere, and another example is steam trapping of instrument heating, i.e. all heating processes where a reduction of the heating capacity (by banking-up) is of advantage.

With no additional effort, the UBK traps ensure noticeable steam savings, besides reducing environmental pollution, by preventing flashsteam clouds and utilizing the sensible heat of the condensate.

1.2.6 Ball float traps, UNA range

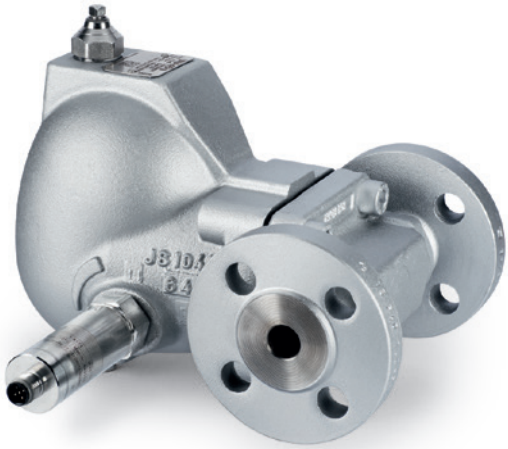

Fig. 8a GESTRA float steam trap UNA 45/46

Condensate discharge is controlled directly by the float-operated valve as a function of the amount of condensate formed. The condensate is discharged immediately as it is formed. The operation of the trap is unaffected by the condensate temperature, by back pressure or by any pressure fluctuations (see Fig. 5).
Automatic air-venting of the plant is ensured by the UNA 4 float traps with "Duplex" control (thermostatic bellows). Thanks to its functional principle, this trap range is suitable for all discharge tasks. It is suitable for use in plants controlled on the steam side: for heating processes with extreme pressure and flowrate fluctuations and very low pressures down to vacuum, and for trapping steam driers and flash vessels whilst maintaining the level at the required height. If the steam is relatively wet, trapping of steam mains with float traps might be necessary.
Float traps are the only traps that can be used for removing air and also for draining cold condensate (e.g. from compressed air installations), distillates and other chemical products having a saturation curve differing from that of water. They can also be used with flash vessels or discharge controls for maintaining a certain condensate level (Simplex design).

Features:
- No banking-up of condensate
- Operation unaffected by back pressure
- Automatic air-venting of the plant (with the Duplex versions)
- Relatively small-sized for a float trap
- Versions for horizontal and vertical installation

1.2.7 Thermodynamic steam traps, DK range

Thermodynamic traps have a simple design and small size. In addition, they are resistant to waterhammer and freezing. During operation, these traps require a small amount of steam for control purposes.
The thermodynamic steam traps are made of stainless steel in the following variants:

DK 57 L - for small condensate flowrates
DK 57 H - for large condensate flowrates
DK 47 L - as above, additionally equipped with a strainer
DK 47 H - as above, additionally equipped with a strainer

Further data:
PN 63, DN 10/15/20/25 mm
Screwed sockets
3/8", 1/2", 3/4", 1" BSP or NPT

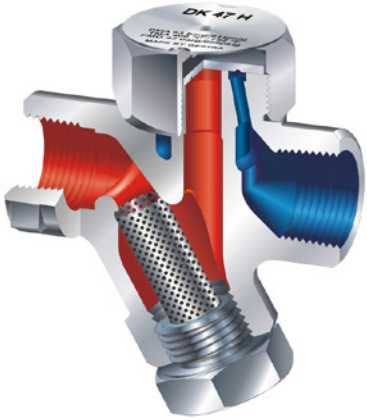

Fig. 8b Thermodynamic steam trap DK 47

1.2.8 Thermodynamic steam traps with stage nozzle, GK range, and with radial stage nozzle, ZK range (Fig. 9)

Fig. 9 GESTRA drain and control valve with radial stage nozzle ZK 29

The state of the condensate prevailing in the nozzle system (cold – condensate only; hot – condensate + flash steam; boiling hot – minimum condensate + maximum flash steam) controls the condensate flowrate without any modification of the cross-sectional area. The traps can therefore be used without any mechanical readjustment being necessary, even if the operating conditions vary to a certain extent; it suffices to adjust them once to suit the operational situation. Because of their excellent regulating characteristic and high wear resistance, the ZK valves are ideally suited as proven low-noise control valves in control systems with a high pressure drop, e.g. injection cooling, leak-off control and level control.
The stage-nozzle traps GK with handwheel operation are used for the discharge of high flowrates with a relatively constant amount of condensate forming, such as evaporators, tank heating, rotating drying cylinders etc.

Features:
- Very high flowrates with low weight and reduced dimensions
- Simple and reliable design
- High wear resistance
- Unaffected by dirt

1.2.9 Drainage systems for use in power stations

In modern power stations, the demands on drain valves of the type ZK are increasing together with the efficiency. These valves are characterized by high resistance to wear, tight sealing and low maintenance costs, making a significant contribution to economical operation of the power station. In addition, new capacitance probes are able to detect condensate of extremely low conductivity independently of the pressure and temperature. This now enables level-dependent (controlled) drainage at positions where the temperatures had previously ruled out their use. Plant components can be protected from damage caused by undetected quantities of condensate. The controlled drainage equipment is only opened when condensate is actually present. In the presence of superheated steam, the valves are closed, thereby preventing steam losses and achieving a high degree of operating safety and reliability.

For instance, before the steam turbine of a power station can be started, the steam lines must be freed of condensate and warmed to their specified start-up temperature. Fig. 10a shows an example of the drainage for the turbine plant of a conventional power station. The live steam line is additionally heated by a separate warm-up valve.

The drainage points marked with the steam trap symbol consist of two independent traps. The ZK drain valve is used for the condensate discharge during start-up and for any further warming-up which may be needed. This valve is closed after a preset time has elapsed or when a certain temperature has been reached in the relevant part of the plant. It opens at the earliest when the power station block is shut down. In parallel to this procedure, controlled drainage using level probes is also possible. Owing to heat losses in the drain line, small quantities of condensate are produced and these are discharged by a thermostatic steam trap. This continuous drainage is necessary to prevent the condensate from rising in the drain lines, which sometimes extend over long distances (Fig. 10b).

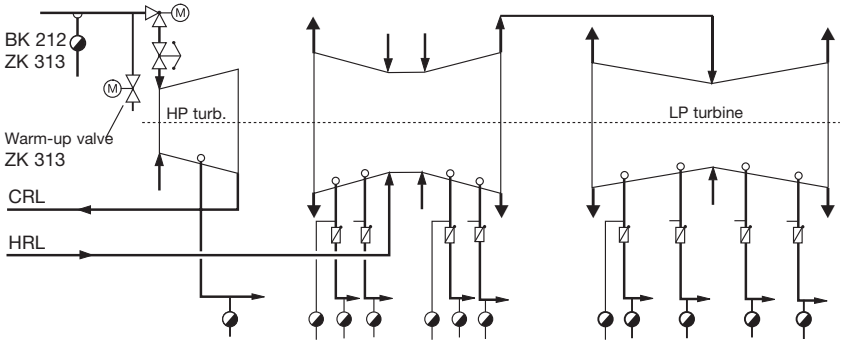

Drainage equipment			
1) Continuous drainage of the extractions	BK 212 BK 29	BK 29	BK 45
2) Start-up drainage of	ZK 313	ZK 29	ZK 29

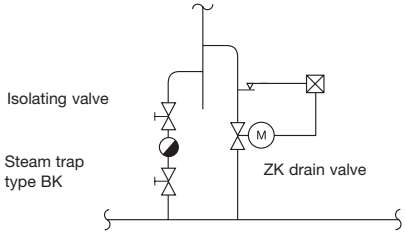

Fig. 10a Drainage scheme for a turbine plant

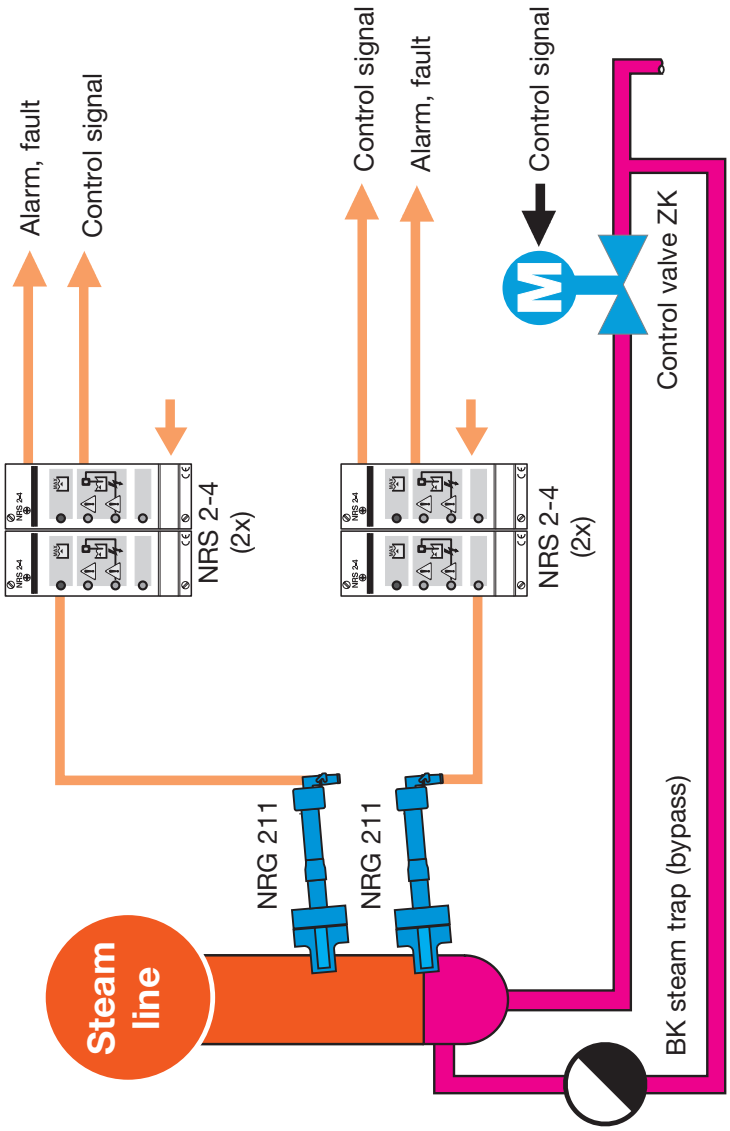

Fig. 10b Drainage scheme for a high-pressure superheated steam line

Page

2. Basic Principles of Steam Trapping with Examples

2.1 – 2.6	General	27
2.7	Separate Trapping	29
2.8	Banking-Up of Condensate (Pro and Contra)	31
2.9	Measures for Preventing Waterhammer	32
2.10	Air-Venting	38

3. Selection of Steam Traps

(For the dimensioning of steam traps, see Section 12.2) 40

2. Basic Principles of Steam Trapping with Examples

2.1 The condensate should be freely discharged downwards from the heat exchanger (Fig. 11)

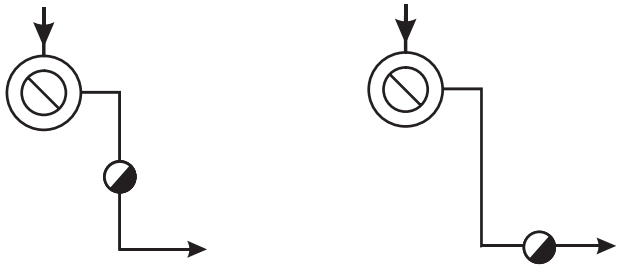

Fig. 11

2.2 A certain differential pressure (pressure drop) is required by the steam trap (Fig. 12)

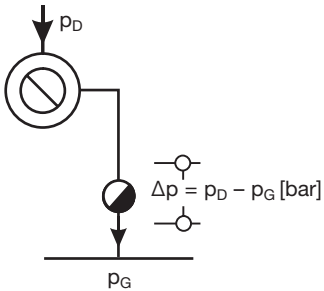

Fig. 12

2.3 If the condensate downstream of the trap is lifted, the differential pressure is reduced by approximately 1 bar for 7 m of lift, or 2 psi for 3 feet of lift (Fig. 13)

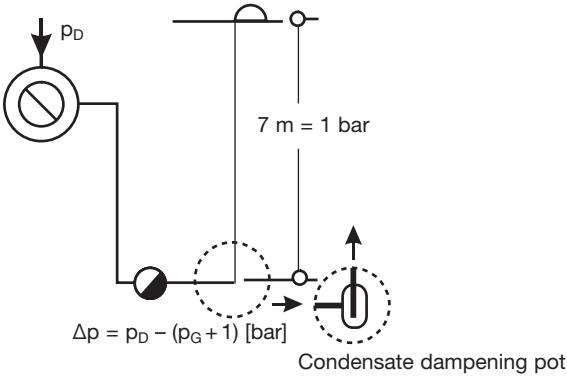

Fig. 13

2.4 **If, with an unfavourable layout, the condensate upstream of the trap has to be lifted, special arrangements are required** (Fig. 14).
In this example, the drainage of the heat exchanger will be intermittent!

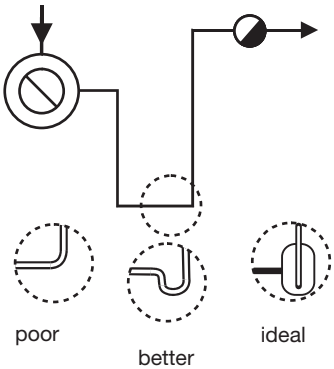

Fig. 14 Use of a condensate dampening pot, type ED

2.5 **The pipework downstream of the steam trap should be adequately sized, so that high back-pressures do not build up as a result of flash steam** (Fig. 15).

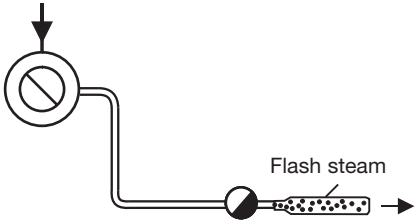

Fig. 15

2.6 **As far as possible, the condensate should be collected and re-used** (Fig. 16)

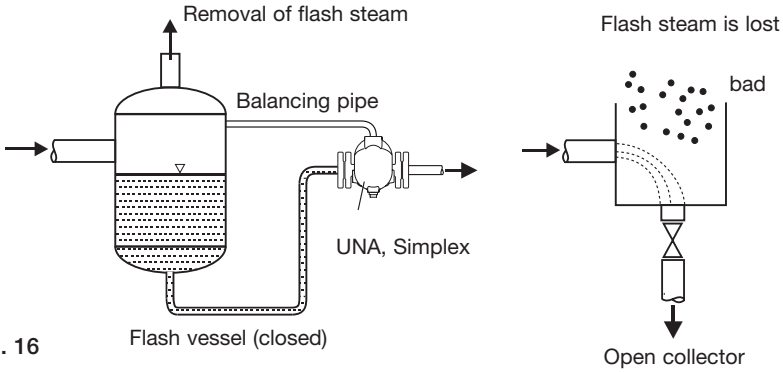

Fig. 16

2.7 Each heat exchanger or heating unit should be trapped separately

2.7.1 Separate trapping of each individual heat exchanger (individual drainage) (Fig. 17)

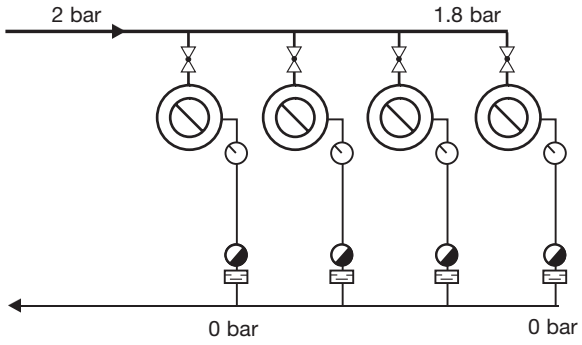

Fig. 17 Separate drainage ensures condensate discharge without banking-up. Individual steam-side control is then possible. Banking-up and waterhammer in the heating spaces is prevented. Additionally installed DISCO non-return valves RK stop condensate returning to the heat exchanger when, for example, the steam pressure in the heat exchanger drops owing to the control valve throttling strongly or closing. Vaposcopes downstream of the heating surfaces permit visual monitoring. Banking-up is detected reliably.

2.7.2 Drainage of several heat exchangers connected in parallel with a single trap (group trapping) (Fig. 18)

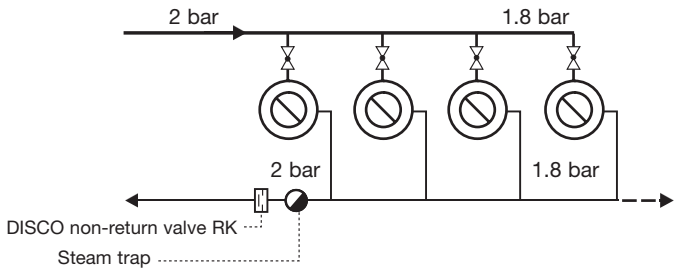

Fig. 18 Group trapping should be avoided. The pressure drop in the steam line will cause different pressures in the units. Here the heating spaces are short-circuited on the condensate side. There will be mutual interference, condensate will bank up and waterhammer will occur.

2.7.3 Drainage of several heat exchangers connected in series (e.g. drainage of multi-platen presses) (Fig. 19)

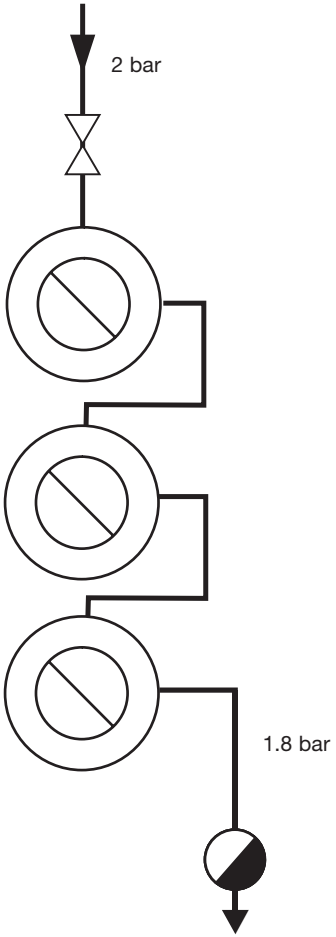

Fig. 19 Series connection
Small identical heat exchangers (such as the steam plates of multi-platen presses) can successfully be connected in series, provided that there is a continuous fall from the steam inlet to the trap. To obtain perfectly equal surface temperatures in the heating spaces, there must be no banking-up of condensate in the steam space at all. In many cases, this can only be prevented by means of a certain steam leakage through the trap (BK regulated correspondingly). Because steam losses then occur, separate trapping may be the more economical solution, even for very small heat exchangers.

2.8 Banking-Up of Condensate (Pros and Cons)

2.8.1 Banking-up of condensate in the heating exchanger reduces the rate of heat transfer (Fig. 20)

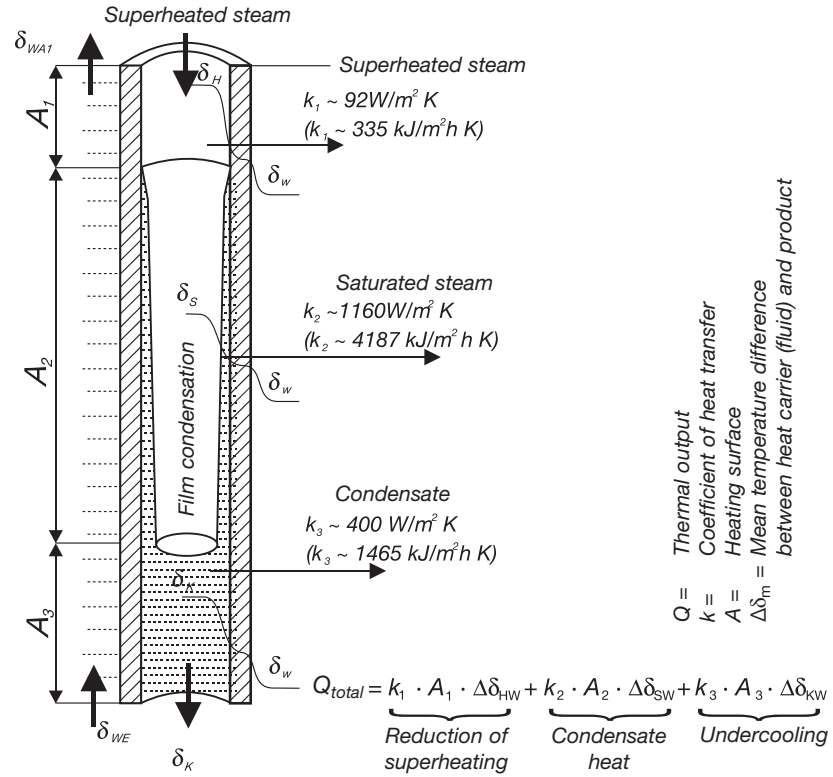

Fig. 20 Heating with superheated steam and banking-up of condensate
Heat exchange and temperature gradient in a steam-heated water heater (counterflow heat exchanger).
Example: The heating surface is heated up with superheated steam, saturated steam and condensate in turn; the medium to be heated is water. This results in the following heat transition coefficients:

For superheated steam	k ~ 92 W/m²K (335 kJ/m²hK)
For saturated steam	k ~ 1160 W/m²K (4187 kJ/m²hK)
For condensate	k ~ 400 W/m²K (1465 kJ/m²hK)

The rate of heat transfer for saturated steam is about 12 times greater than for superheated steam and about 4 times greater than for condensate.

2.8.2 Banking-up of condensate will improve heat utilization. It must, however, be considered that this may cause waterhammer.

2.9 Measures for Preventing Waterhammer

2.9.1 Condensate-free heating surfaces through proper installation (Figs. 21, 22 and 23)

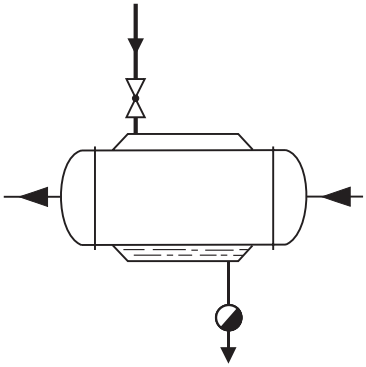

a) If the plant is shut down, vacuum is formed in the steam space as the remaining steam condenses. The condensate may then be sucked back into the heating space or not completely discharged. When the plant is restarted, the steam flows across the water surface, condenses suddenly and causes waterhammer.

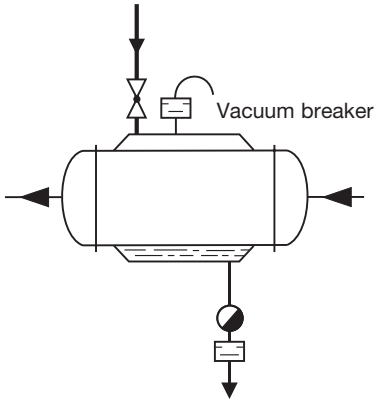

b) Installation of a GESTRA DISCO non-return valve as a vacuum breaker prevents the formation of vacuum. The condensate cannot be sucked back, and the remaining condensate will flow off. Waterhammer is therefore avoided. If the condensate line is under pressure, the installation of a DISCO non-return valve downstream of the steam trap is recommended.

Fig. 21 Waterhammer in heat exchangers

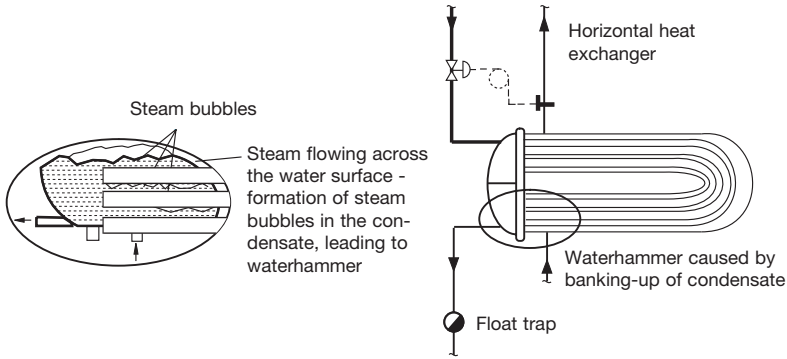

Fig. 22 Waterhammer in horizontal heat exchangers controlled on the steam side
Waterhammer is avoided if the condensate is completely discharged from the heating surface at all load conditions (prevention of banking-up). Waterhammer can occur if part of the heating surface is flooded (banking-up). The condensate cools down, and so the steam flows across the cold water surface. This leads to steam bubbles in the condensate which condense abruptly.

Possible causes for banking-up
Inadequate steam trap (e.g. unsuitable because condensate discharge not instantaneous, insufficient trap size).
Trap operation imperfect (e.g. trap does not open, or opens with too high undercooling).
Differential pressure for steam trap too low, perhaps because of too high a pressure drop across the heat exchanger at low load conditions (e.g. back pressure in condensate line downstream of trap > 1 bar absolute, pressure in heat exchanger at low load < 1 bar absolute).

Measures for preventing waterhammer
Use only float traps of the type UNA Duplex, to ensure instantaneous condensate discharge without banking-up.
Ensure that the trap is large enough, since at low load conditions the pressure upstream of the trap might be extremely low (even vacuum).
The latter requires that there is no overpressure downstream of the trap (no back pressure; no rising of the line), and that the condensate flows towards the trap with as large a slope as possible.
If it is possible that a vacuum may form in the heat exchanger, the installation of a vacuum breaker (non-return valve RK) on the steam main downstream of the controller is recommended.

2.9.2 “Dry” condensate lines (sufficient fall, no formation of water pockets)

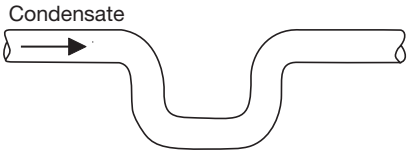

Fig. 23 Undesired formation of water pockets

2.9.3 Dry steam piping and steam manifolds (steam consumption from manifolds or piping always from the top; proper drainage, with installation of a steam drier if necessary) (see Figs. 23, 23a, 23b, 24 and 30).

Fit a drainage pocket at least every 100 m along the steam main, and also wherever the main rises.

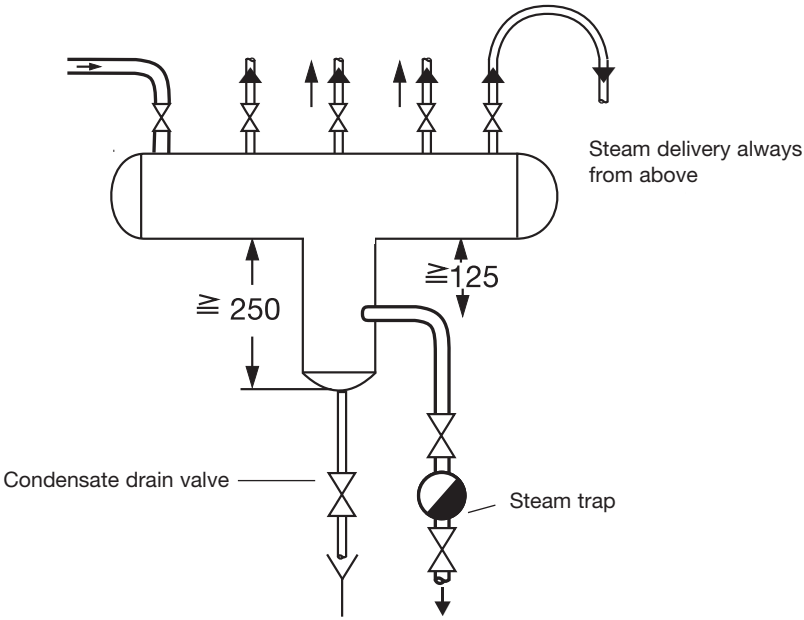

Fig. 23a Drainage from steam manifold

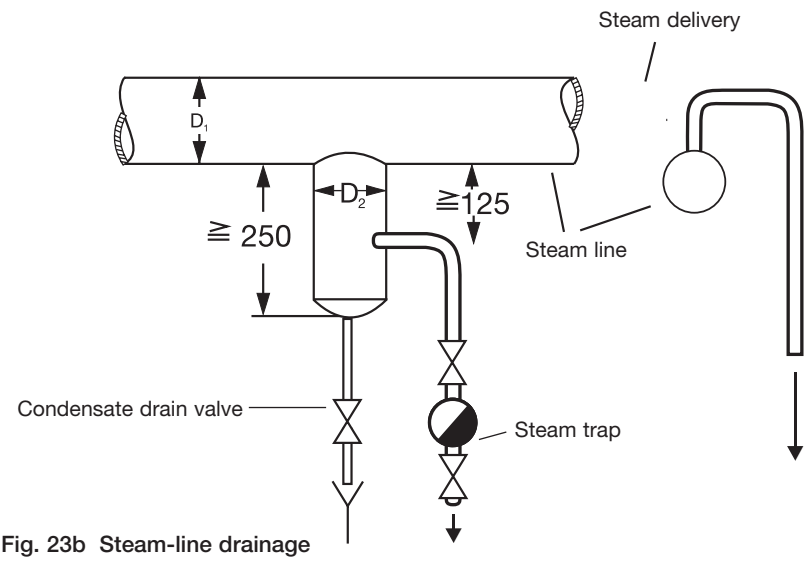

Fig. 23b Steam-line drainage

D1	mm	50	65	80	100	125	150	200	250	300	350	400	450	500	600
D2	mm	50	65	80	80	80	100	150	150	200	200	200	250	250	250

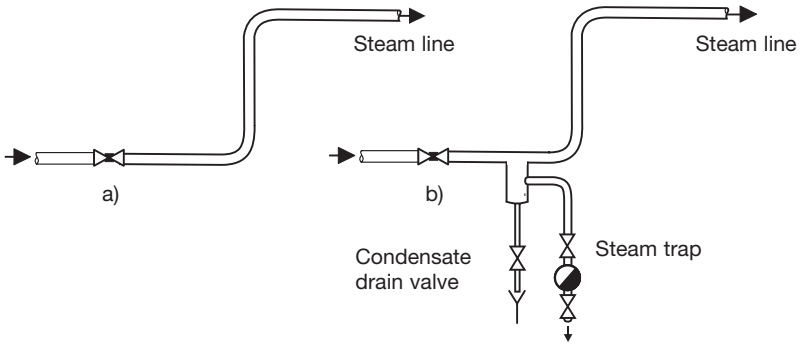

Fig. 24 Waterhammer in steam lines

a) Whenever the stop valve is closed, the steam remaining in the line condenses. The condensate collects in the lower part of the line and cools down. When the valve is reopened, the inflowing steam meets the cold condensate. The result is waterhammer.

b) If the run of the pipe cannot be changed, the line should be drained, even if it is relatively short.

2.9.4 Steam traps in continuous operation

Thermostatic steam traps often discharge the condensate intermittently and are therefore only to be recommended for low condensate flowrates. It is advisable to drain heat exchangers, and here in particular heat exchangers controlled on the steam side, by means of float traps type UNA!

2.9.5 Buffer vessels and water seals if condensate is lifted (Fig. 25)

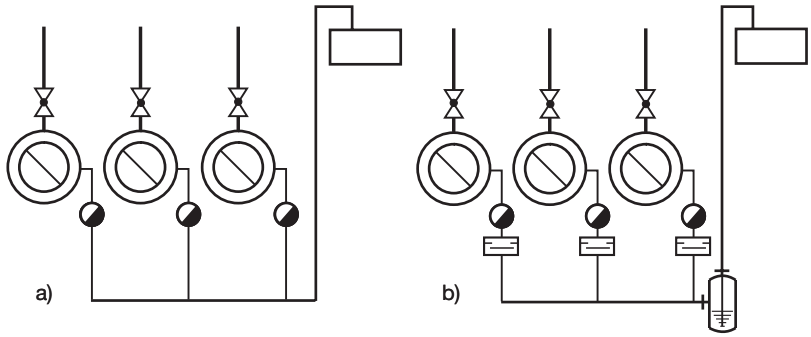

Fig. 25 Waterhammer if condensate is lifted

a) Waterhammer can occur if condensate if lifted.

b) Installing a condensate dampening pot makes it possible to discharge the condensate with a low noise level. Any waterhammer which arises is “cushioned”.

2.9.6 Proper planning and arrangement of the various condensate branches and the header (Figs. 26 and 27)

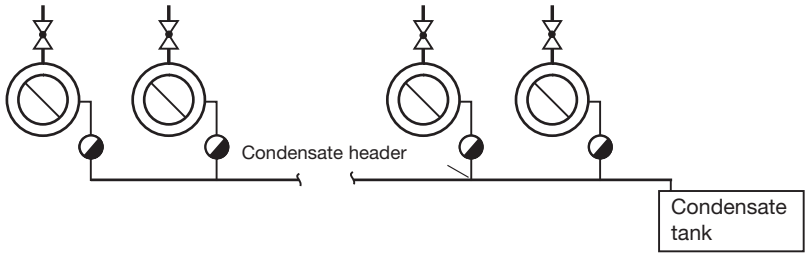

a) The condensate from the heat exchanger on the far end cools down strongly on its way to the condensate tank. The condensate with the flash steam from the heat exchangers that are closer to the condensate tank mixes with this cold condensate. The flash steam condenses abruptly and waterhammer will result.

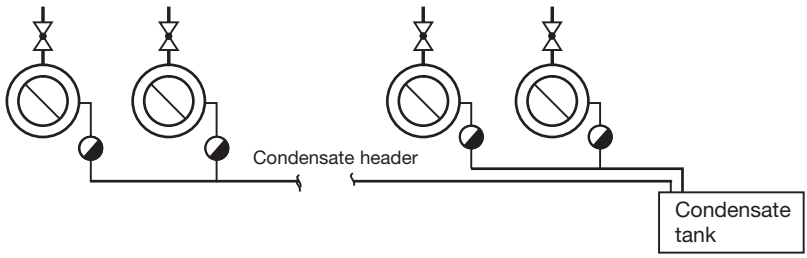

b) Waterhammer will be avoided if the condensate is sent to the condensate tank via separate headers. Condensate from heat exchangers using different steam pressures should also be fed to the condensate tank by separate headers.

Fig. 26 Waterhammer in condensate lines

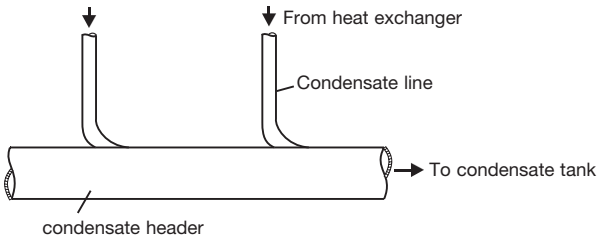

Fig. 27 The condensate from the various drain points should be fed into the header in the direction of flow

2.10 Air or other non-condensable gases in the steam reduce the temperature and heating capacity of heat exchangers, and may lead to uneven temperatures. For an air percentage of 10 %, the heating capacity drops by approx. 50 % (disadvantageous for e.g. presses, rotating drying cylinders) (Figs. 3 and 28).

t_s	P	Percentage of air in steam by volume					
Saturated steam temperature [°C]	Gauge pressure with pure steam [barg]	1 %	3 %	6 %	9 %	12 %	15 %
		Necessary gauge pressure for air-contaminated steam [barg]					
120.23	1	1.02	1.06	1.13	1.20	1.27	1.35
133.54	2	2.03	2.09	2.19	2.32	2.41	2.53
143.62	3	3.04	3.12	3.25	3.40	3.52	3.71
158.84	5	5.06	5.18	5.38	5.60	5.82	6.06
184.05	10	10.11	10.34	10.70	11.09	11.50	11.94
201.36	15	15.16	15.48	16.02	16.58	17.20	17.82
214.84	20	20.21	20.65	21.34	22.07	22.87	23.70

Fig. 28

2.10.1 Large steam spaces may require separate air vents (Figs. 29 and 29a)

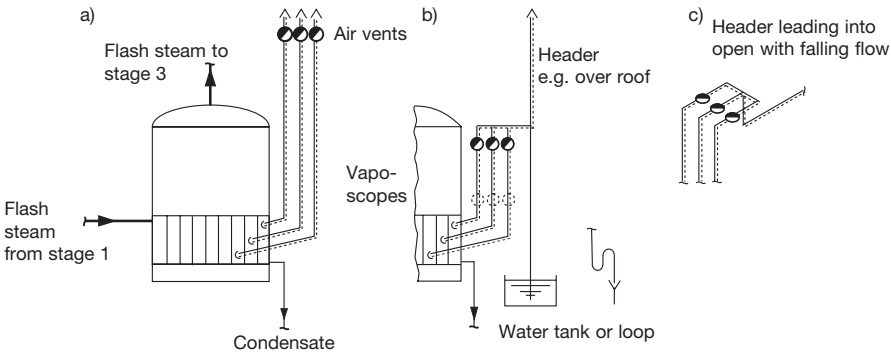

Fig. 29 Venting of evaporators heated with flash steam

Small and medium-sized heat exchangers are adequately vented through steam traps with additional automatic air-venting.

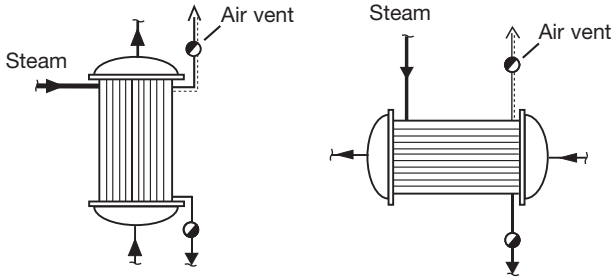

a) Heat exchangers with tube bundles

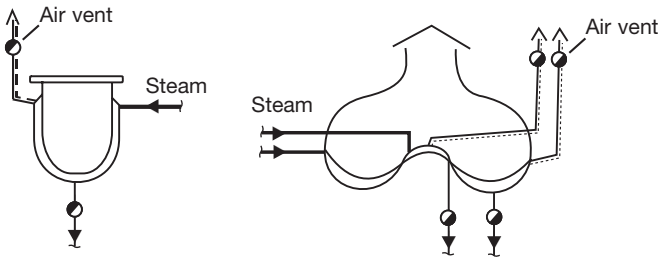

b) Jacketed heat exchangers

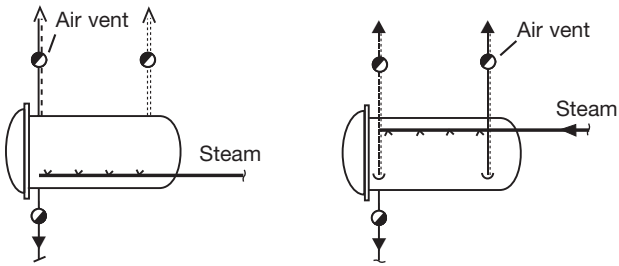

c) Autoclaves

For larger vessels 2 or more vents necessary.

Fig. 29a

3. Selection of Steam Traps

(For the sizing of steam traps, see Section 12.2)

Great care should be taken in choosing the steam trap best suited for a particular application.

3.1 The trap should be sized so that even the peak condensate flow is discharged properly. If the plant is operated with varying pressure (e.g. controlled plants), the capacity characteristics of heat exchanger and steam trap should be compared. The capacity characteristic of the steam trap must be at least equal to that of the heat exchanger at the possible service pressures (e.g. controlled plants) or, if possible, even higher. An insufficiently sized trap leads to banking-up of condensate, the inevitable consequences being waterhammer and a reduction in the heating capacity.

3.2 The traps should not be considerably oversized either. They would then have a tendency towards overcontrolling, which may lead to waterhammer through intermittent operation. This point has to be considered particularly with thermodynamic disc-type traps and inverted-bucket traps.

3.3 The steam trap should provide automatic air-venting during operation. Air in the steam space of the heat exchanger will prolong the heating-up period during plant start-up and reduce the heating capacity during normal operation (see Fig. 28).

3.4 Normally, the steam trap should drain the condensate promptly so that it cannot waterlog the heating surface.

3.5 Provided the system permits (if the heating surface is large enough, and waterhammer is unlikely due to appropriate layout of the heat exchanger and the pipeline upstream of the trap), steam traps should allow condensate discharge with undercooling (from the GESTRA product range: BK with large undercooling, MK with “U” capsule, and UBK). The degree of undercooling allowable depends on the desired temperature of the product to be heated.

Page

4. The Most Important Heat Exchangers - Selecting the Most Suitable Steam Trap

4.1	Steam Piping	43
4.1.1	Steam driers (steam separators)	43
4.1.2	Saturated steam mains (without steam separator)	44
4.1.3	Superheated steam mains	45
4.1.4	Pressure regulators – see Section 13.1	125
4.1.5	Temperature controllers – see Section 13.2	128
4.2	Steam Manifolds – see Section 4.1	43
4.3	Steam Radiators, Finned-Tube Heaters, Radiant Panels, Convectors for Space Heating	46
4.4	Unit Air Heaters	47
4.4.1	Air heaters, controlled on the air side	47
4.4.2	Air heaters, controlled – see Section 4.6.1	49
4.5	Heating Coils, Horizontal Heaters	48
4.6	Air Conditioning Plants	49
4.6.1	Air heaters controlled on the steam side	49
4.6.2	Air humidifiers	50
4.7	Storage Calorifiers, Controlled	50
4.8	Counterflow Heat Exchangers, Controlled	51
4.8.1	Horizontal counterflow heat exchangers	51
4.8.2	Vertical counterflow heat exchangers	52
4.8.3	Vertical counterflow heat exchangers with use of the sensible heat	52
4.9	Tube-Type Preheaters	53
4.10	Digesters	55
4.10.1	Process digesters and pans (sugar factories, chemical industry, cellulose production)	55
4.10.2	Boiling pans with heating coils	56
4.10.3	Jacketed boiling pans	57
4.10.4	Tilting pans	58
4.11	Brewing Pans (Coppers, Mash Tubs)	59

		Page
4.12	High-Capacity Evaporators	60
4.13	Stills Indirectly Heated	61
4.14	Drying Cylinders, Drying Drums	62
4.15	Baths (e.g. for Cleaning and Pickling)	63
4.15.1	Heating coils with uniform fall and condensate discharge at base	63
4.15.2	Acid baths	64
4.16	Band Driers	65
4.17	Hot Tables, Drying Platens	66
4.18	Multi-Platen Presses	67
4.18.1	Multi-platen presses connected in parallel	67
4.18.2	Multi-platen presses connected in series	68
4.19	Tyre Presses (Vulcanizing Presses)	69
4.20	Vulcanizers	70
4.21	Autoclaves	71
4.22	Ironing Presses, Garment Presses	72
4.23	Steaming Mannequins – see Section 4.22	73
4.24	Ironers and Calenders (Hot Mangles)	74
4.25	Dry-Cleaning Machines	75
4.26	Tracer Lines	76
4.27	Jacketed Tracing Lines	77
4.28	Instrument Tracing	78
4.29	Tank Heating	79

4. The Most Important Heat Exchangers – Selecting the Most Suitable Steam Trap

4.1 Steam Piping

4.1.1 Steam driers (steam separators) (Fig. 30)

Fig. 30 GESTRA steam separator drained by float trap type UNA

Steam that is not superheated (i.e. saturated steam) is always, in fact, wet steam (moist steam) and contains a certain quantity of water droplets in suspension which reduce its heating capacity. If the percentage of water is too high, waterhammer may be caused in the steam main. Too high a moisture content may also be undesirable for ironing presses, in air-conditioning plants etc.

Special requirements of the trap:

The condensate, which is very close to saturation temperature, should be discharged instantly. Furthermore, the steam trap should air-vent the steam line automatically.

It is necessary to use float traps.

Recommended equipment:
UNA Duplex ball float trap and GESTRA steam separator type TD.
Quite often, the usual drainage of the steam main solely by means of a steam trap is not sufficient. In these cases (e.g. if the steam is generated in a coil-type boiler, or if the steam is to be injected into the product), the use of a steam separator operating on the centrifugal principle is recommended, which will remove the water droplets and lead them to the trap.

4.1.2 Saturated steam mains (without steam separator)

The steam trap by itself can only remove the condensate flowing along the bottom of the steam line, but not the water droplets in suspension in the steam. The latter requires a steam separator (see Section 4.1.1). During warming-up of the pipeline (start-up), large amounts of condensate are formed; the low pressures then prevailing in the line further impede the process. During plant operation, small amounts of condensate are continuously being formed, depending on the pipeline insulation. Drain points should be provided, for instance at low points, at the end of the line, in front of risers, at the steam distribution manifold and, in the case of horizontal lines, at regular distances of not more than 100 m (300 ft) (see Figs. 23 and 24).
For effective steam-line drainage, a water pocket (e.g. a T-piece) should be provided (see Fig. 23). For large mains and long lines, the installation of a drain valve of the type AK 45 is recommended to discharge the large start-up load and to blow the dirt directly to drain.
Special requirements of the trap:
- During start-up, the trap should air-vent the plant and simultaneously discharge the relatively large condensate load at rather low differential pressures without too much delay.
- In continuous operation, on the other hand, small amounts of condensate are continuously being formed at almost saturation temperature.
- During periods of shut-down, the trap – in outdoor plants at least – should drain the pipeline and itself to avoid freezing.

Recommended traps:
- UNA Duplex for vertical installation; alternatively for small condensate flowrates during continuous operation, BK and MK with N capsule. If the traps discharge into the open by way of exception, the flash steam formed may be a nuisance. If the trap is not installed close to the steam main, but a few metres away, the MK with U capsule or the BK with undercooling adjustment (Δt max. 30 – 40 K) may be used.

4.1.3 Superheated steam mains

Normally no condensate is formed during continuous operation. Heat losses through the pipeline, as a rule, reduce only the superheat temperature. Condensate is formed only during start-up of the plant and whenever there is no or very little steam consumption, i.e. when the steam flowrate along the main is very small. The amount of condensate arising during continuous operation depends solely on the heat losses of the line leading to the trap.

If it may be expected that no condensate will be formed in the steam line during operation (i.e. a continuously high level of steam consumption), only start-up drainage is needed for installations in frost-proof spaces. In outdoor plants which are endangered by frost, it will suffice for the condensate formed in the pipe leading to the trap to be discharged at a temperature which just prevents freezing. This is of particular importance for open-air discharge, as lowering the discharge temperature reduces the unwanted flashing to a minimum (Fig. 31).

The shorter the condensate line is upstream of the trap, the lower the amount of condensate and consequently also the amount of flash steam formed. The trap should therefore be installed as close as possible to the steam main, with the condensate line and steam trap sufficiently insulated.

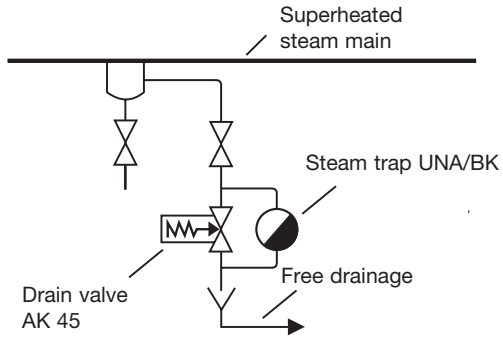

Fig. 31

Special requirements of the trap:

- Large flowrate during start-up (high cold-water capacity) at relatively low pressures and a good air-venting capability, closure as steam-tight as possible and, if required, condensate discharge with more undercooling but ensuring large cold-water capacity.

Recommended traps:

- If, even during continuous operation, condensate may form in the steam line, if only for short periods: UNA or BK with factory setting.
- If condensate is only formed during start-up: BK with undercooling adjustment. For relatively large condensate flowrates at very low pressures during start-up, the GESTRA start-up drain valve type AK is of particular advantage. During start-up, this unit remains completely open and does not close unless the preset differential pressure is reached. From this moment, the “normal” steam trap will ensure condensate discharge and air-venting.

- In outdoor plants which may freeze, the condensate line immediately upstream of the AK should be drained and, in addition, the AK and the condensate line should be insulated.

4.1.4 Pressure regulators – see Section 13.1

4.1.5 Temperature controllers – see Section 13.2

4.2 Steam Manifolds – see Section 4.1 “Steam Piping”

4.3 Steam Radiators, Finned-Tube Heaters, Radiant Panels, Convectors for Space Heating (Fig . 32)

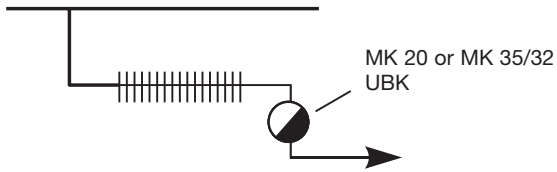

Fig. 32

Low heating temperatures with the correspondingly low vapour pressures (e.g. flash steam reduced from a higher pressure range) are advantageous from a hygienic and physiological viewpoint.
If the heating services are adequately sized (overdimensioned), they can be partly flooded with condensate, which - at least for higher pressures - will lead to the corresponding steam savings (and cost reduction) besides reducing the heating temperature.

Special requirements of the trap:

- In low-pressure plants, sufficient flowrate even at an extremely low pressure head
- At higher pressures, condensate discharge with a certain amount of undercooling
- Relatively unaffected by dirt (e.g. particles of rust forming during intermittent operation and long periods of shutdown of the heating installation during the summer)
- Corrosion-resistant internals

Recommended traps:

- For low-pressure plants: rapid drain valve MK 20. For higher pressures: MK 35/32 with U-type membrane regulator
- BK with large undercooling adjustment
- If a condensate discharge temperature as low as 85 °C is acceptable (sufficiently large heating surface and no danger of waterhammer): UBK

4.4 Unit Air Heaters

4.4.1 Air heaters, controlled on the air side (Fig. 33)

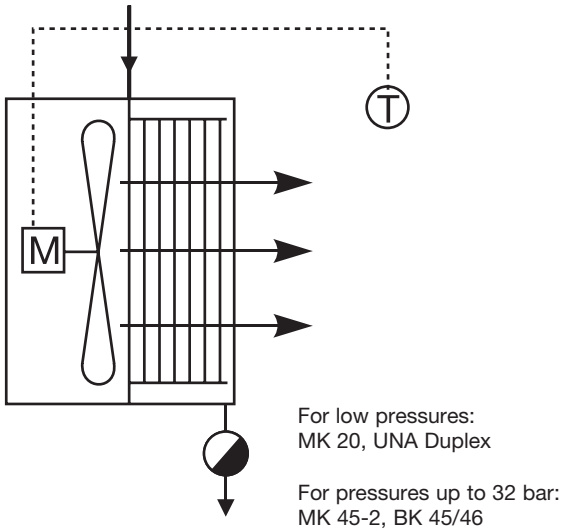

Fig. 33

Separate space heaters or unit heaters (not including those in air conditioning plants or for air preheating in manufacturing and drying plants) are, in general, controlled on the air side only, for instance by switching the fan on and off.
In this case, either very high or very low condensate loads are to be expected. In air heaters heated with low-pressure steam, the pressure in the steam space may vary considerably (the pressure drops with increasing condensate load).
At higher steam pressures, an additional utilization of the sensible heat of the condensate in the air heater through banking-up is advantageous if it is not used otherwise in operation.
A prerequisite here, however, is that the heating capacity of the air heater is still adequate and that the heating plates are arranged to prevent waterhammer (vertically).

Special requirements of the trap:

- In low-pressure plants, a relatively large flowrate, even at a low pressure head
- In plants with medium heating-steam pressures, in which it is possible to use the sensible heat of the condensate through banking-up, the steam trap must be able to discharge the condensate with undercooling. In both cases, the trap should air-vent the plant automatically.

Recommended traps:

- MK 45-2, UNA Duplex
- MK with U-type membrane regulator

4.4.2 Air heaters, controlled.

See Section 4.6 “Air Conditioning Plants”.

4.5 Heating Coils, Horizontal Heaters (Fig. 34)

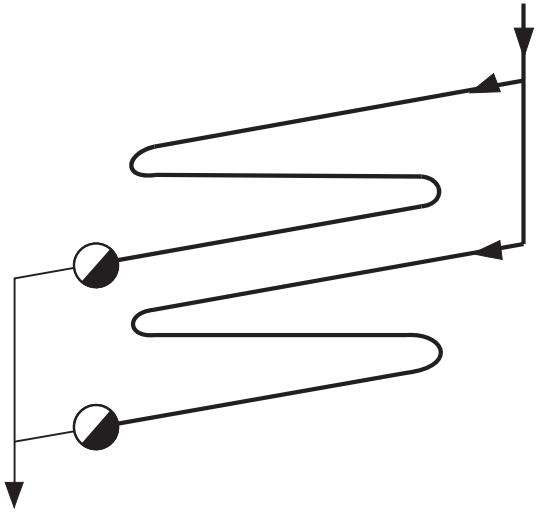

Fig. 34

To avoid waterhammer, the pipe run between the steam inlet and steam trap must be arranged to fall in the direction of flow. Several heaters in one unit should be connected in parallel but drained separately (see Section 2.7).

Special requirements of the trap:

- Discharge of the condensate without banking-up, even for high ambient temperatures (e.g. installation directly in the heating unit)
- Automatic air-venting

Recommended traps:

- MK with N capsule (MK with H-type membrane regulator for large flowrates); UNA Duplex

4.6 Air Conditioning Plants (Fig. 35)

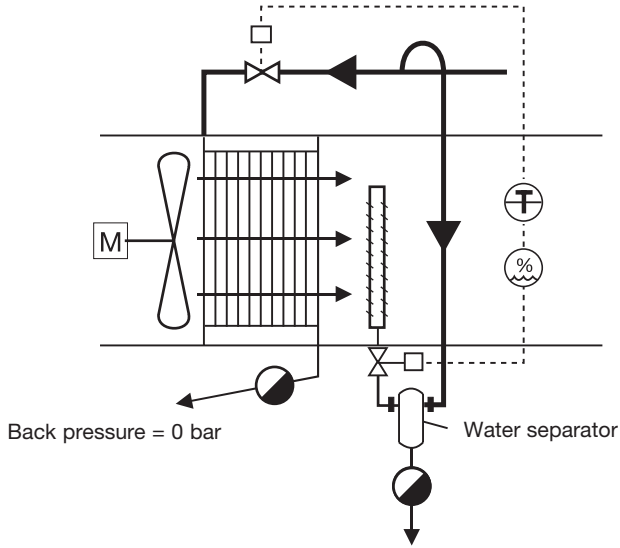

Fig. 35

4.6.1 Air heaters

For air heaters controlled on the steam side, the following applies with regard to condensate discharge (see also Section 4.8. “Counterflow Heat Exchangers, Controlled”):

The pressure in the steam space and the condensate load may vary considerably, and at low-load conditions even a vacuum may form at times. Air will then enter the steam space and will have to be discharged rapidly when the heating capacity has to be increased again. To avoid thermal stratification in the air to be heated, and also to prevent waterhammer, banking-up of condensate must be avoided even at low load. This requires a sufficient fall (no back pressure!); the condensate should drain by gravity, even for operation that is effectively pressureless.

Special requirements of the trap:

- As with all controlled systems, the steam trap must immediately respond to varying operating conditions (pressure, flowrate) to avoid the accumulation of condensate.
- Even at a very low pressure head, a correspondingly large amount of condensate must still be discharged.
- The steam trap must air-vent the plant automatically, also during continuous operation.

Recommended traps:

- UNA Duplex, MK with N capsule (MK with H capsules for large flowrates)

4.6.2 Air humidifiers

To obtain a uniform air humidity, the steam should be as dry as possible. Therefore, it should be dried mechanically before being fed to the steam dispersion tube (steam lance) (see Section 4.1.1 “Steam driers”).

Special requirements of the trap:

The condensate, which is practically at saturation temperature, should be discharged without any delay (no banking-up).

Recommended traps:

- UNA Duplex
- If there is a cooling leg, also MK with N capsule

4.7 Storage Calorifiers, Controlled

E.g. for heating water (Fig. 36)

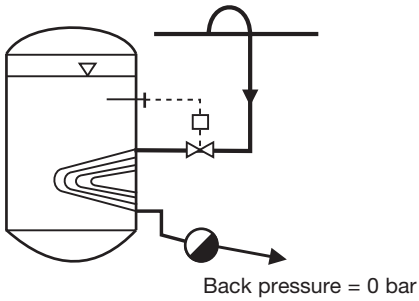

Fig. 36

Warm water is withdrawn more or less intermittently. Consequently, the heating process is also intermittent. Periods with a very light condensate load (merely to make up the heat losses) at a very low pressure head alternate with periods of very heavy load at the maximum pressure head. To avoid waterhammer during low-load operation – where the pressure in the steam space may even drop to a vacuum – the condensate should be allowed to drain by gravity (no back pressure) also downstream of the trap.

Special requirements of the trap:

- Quick response to large fluctuations in pressure and flowrate
- Good air-venting capacity, because air may enter the calorifier during periods of low load; this air will have to be discharged when the load is increased again.
- Relatively large flowrate even at a very low pressure head

Recommended traps:

- UNA Duplex, MK with N capsule (MK with H capsules for large flowrates)

4.8 Counterflow Heat Exchangers, Controlled

4.8.1 Horizontal counterflow heat exchangers (Fig. 37)

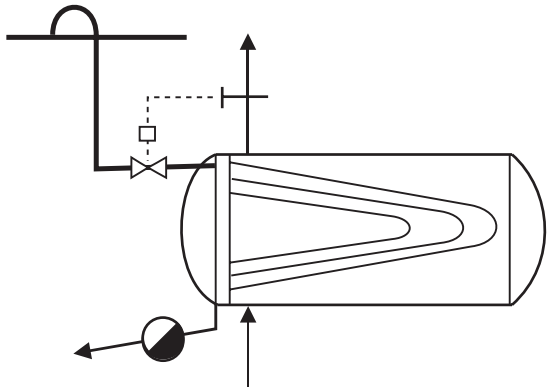

Fig. 37

These heat exchangers operate over the whole pressure range, from very low pressures (light load) down to vacuum, if only for short moments, and up to the maximum admissible pressures.
The condensate flowrate varies accordingly. The extremely low operating pressures that are possible make adequate drainage of the condensate by gravity desirable, not only upstream but also downstream of the trap.
Back pressure is not permissible. If this rule is not followed, waterlogging of the heating surface during periods of low load may cause waterhammer, which in turn may lead to serious disturbances (see also Figs. 21 and 22).
Inadmissible banking-up of condensate can also be caused if the steam trap is too small.
For sizing the trap, it is not sufficient to only consider the maximum flowrate at the maximum admissible pressure; the capacity of the heat exchanger in the low-load range has to be compared with the capacity of the trap at the steam pressure to be expected in the heating space. The trap has to be suitable for the worst possible conditions in each case. If the data for low load cannot be obtained, the following rule of thumb can be applied in determining the size of the trap: Effective differential pressure (working pressure) is approximately 50 % of the service pressure.
Condensate flowrate for trap sizing = max. flowrate to be expected at full load of heat exchanger.
Special requirements of the trap:
No noticeable banking-up of condensate at all operating conditions, relatively large flowrate at low pressures, perfect operation even in the vacuum range, automatic air-venting, also during continuous operation.
Recommended traps:
- UNA Duplex

4.8.2 Vertical counterflow heat exchangers

No special measures need be taken.

4.8.3 Vertical counterflow heat exchangers with use of the sensible heat

In horizontal heat exchangers, waterlogging of the heating surface tends to produce waterhammer, at least in cases where the heating steam is flowing through the tubes.

In vertical heat exchangers that are properly designed, waterhammer will not normally occur, even if the heating surface is flooded. The sensible heat of the condensate may be used directly by always flooding part of the heating surface.

Quite often the heat output of the heat exchanger is controlled through a change in the size of the steam-heated surface (more or less banking-up) by means of a temperature control valve fitted in the condensate outlet (see Fig. 38).

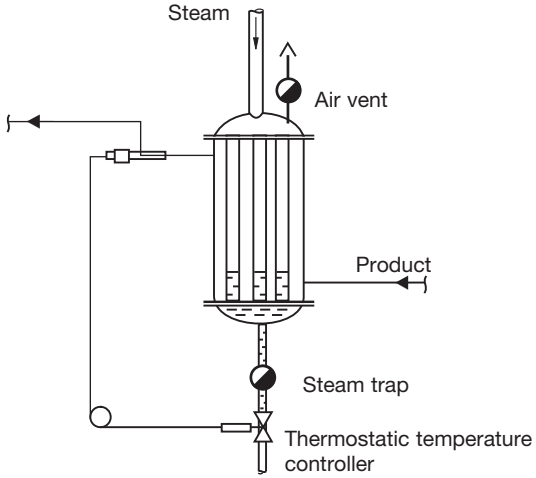

Fig. 38 Constant pressure in the heating space
Varying amounts of condensate accumulation, depending on load.

If the heat exchanger is controlled on the steam side, a constant level can be maintained by the appropriate arrangement of a float trap functioning as the level controller (see Fig. 16). If the heat exchanger is controlled on the condensate side, live steam can be prevented from escaping (e.g. during start-up, at full load or on failure of the regulator), by fitting an additional steam trap.

Special requirements of the trap:

Control on the steam side:

- Maintenance of a given constant condensate level

Control on the condensate side:

- At low condensate temperatures, free passage as far as possible (little flow resistance); closed at saturation temperature, at the latest

Additional requirement:
As the condensate level has to be constantly maintained, the air in the steam space can no longer escape via the condensate line.
The steam space therefore has to be provided with a separate air vent.
Recommended traps:
- Control on the steam side: UNA Duplex
- Control on the condensate side: MK with N capsule or BK
- For air-venting: MK or, for superheated steam, BK

4.9 Tube-Type Preheaters

Process heat exchangers (tube-type preheaters) are used for heating the most varied products continuously flowing through them. The steam supply pressures can vary greatly, depending on the product temperature required. The preheaters may be controlled as a function of the product outlet temperature or sometimes operated without any control.
It is therefore only possible to give a few basic tips from experience.
Horizontal preheaters with the heating steam flowing through the tubes tend to produce waterhammer if condensate is banked up. Therefore steam traps must be used which discharge the condensate without any banking-up, if possible.

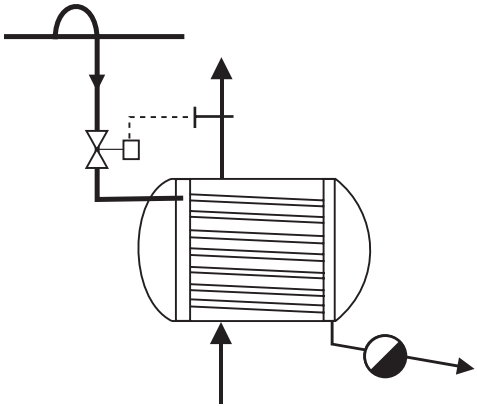

Fig. 39

U-tube bundles have less tendency to waterhammer (see Figs. 37 and 39).
Vertical preheaters with the heating steam flowing through the tube bundle operate without waterhammer, even if condensate is banked up (for an example, see Fig. 38). Preheaters with the product to be heated flowing through the tube bundle and the steam circulating around the individual tubes have no tendency to waterhammer if the steam feed is suitable.
The rated capacity of the preheater is generally based on calculations assuming that the heating surface is completely filled with steam. This point has to be considered when choosing and sizing the traps for all types of preheaters.
Banking-up of condensate reduces the heating capacity.
As far as controlled preheaters are concerned, the recommendations given for controlled counterflow units apply as appropriate (see Section 4.8).

Special requirements of the trap:

- These depend on the individual operating conditions: pressure, flowrate, banking-up of condensate allowable or even desirable. Banking-up not permissible, preheater; preheater controlled or uncontrolled.
- In any case, the steam trap should air-vent automatically.

Recommended traps:

For controlled preheaters:

- UNA Duplex, MK with N capsule (MK with H-type membrane regulator for large flowrates)

For uncontrolled preheaters, if banking-up is undesirable:

- MK with N capsule, UNA Duplex

For uncontrolled preheaters, if banking-up is desirable:

- MK with U-type membrane regulator; BK with large undercooling adjustment

4.10 Digesters

4.10.1 Process digesters and pans

(e.g. sugar factories, chemical industry, cellulose production) (Fig. 40)

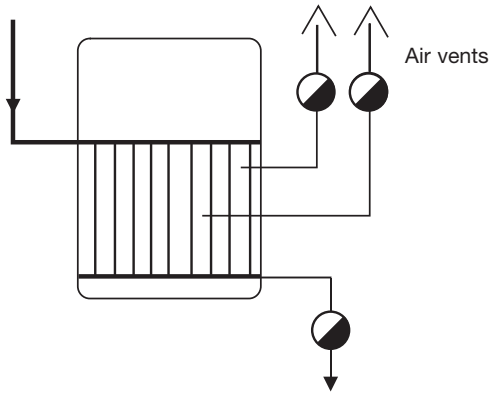

Fig. 40

A fundamental rule: During heating-up of a process batch, the steam consumption and consequently the amount of condensate formed are, in general, several times greater than during the boiling process. However, if the product is boiled and evaporated in one process (e.g. sugar boiling pans), the steam consumption and hence the condensate flowrate remain quite high.

If the boiling process is not also an evaporation process (e.g. cellulose digesters), only the heat lost by radiation has to be replaced.

Compared to the starting condensate load – quite often even larger because of the low initial temperature of the product – the amount of condensate formed when boiling is extremely small. Considering the size of the heating surface, air-venting through the steam trap alone may not be sufficient. The steam space has to be air-vented separately by thermostatic traps. This is of special importance if the heating steam contains a large percentage of incondensable gases (for instance, sugar boiling pans heated with beet-juice vapour containing a considerable percentage of ammonia).

Special requirements of the trap:

- Perfect discharge of very high condensate flowrates, the flowrate during the heating-up process (possibly even at lower pressures) being a multiple of that formed during the boiling process

Additional requirement:

- A separate air vent should be fitted to the steam space.

Recommended equipment:

- For sugar pans and similar heat exchangers with very little pressure head and no excessive differences in flowrate between the heating-up and boiling processes, the stage nozzle trap GK without control function will do the job, otherwise TK.
- For higher pressures, UNA Duplex.
- As air vent, MK with N capsule

4.10.2 Boiling pans with heating coils (Fig. 41)

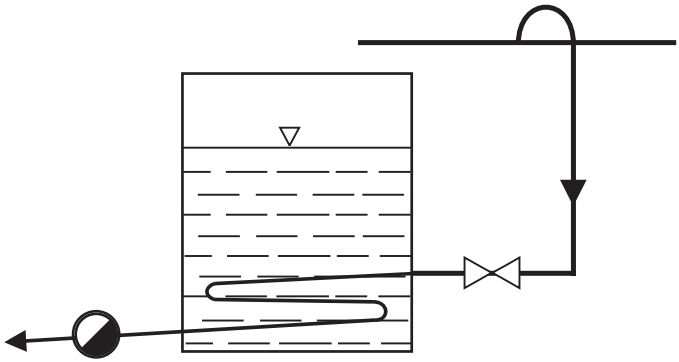

Fig. 41

The same considerations apply to all boiling processes: The amount of condensate formed during heating-up is a multiple of that formed during the boiling process. This point should be considered when choosing and sizing the trap, particularly as banking-up of condensate caused by an insufficient flowrate might lead to waterhammer. The steam trap should also air-vent the boiling pan automatically, otherwise the time required for heating-up will be longer.

Special requirements of the trap:

- Large start-up load
- Good air-venting capacity

Recommended traps:

- At low pressures and up to medium flowrates: MK 20, otherwise MK with N capsule

4.10.3 Jacketed boiling pans (Fig. 42)

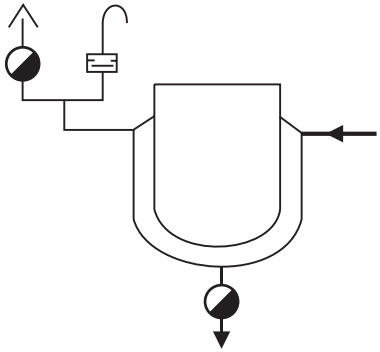

Fig. 42

The condensate load is highest during heating-up and lowest during the boiling process (see also Section 4.10.1). Because of the large steam space, a considerable amount of air has to be discharged during start-up. For small boiling pans, a steam trap with automatic air-venting capacity is sufficient. For large boiling pans, a thermostatic trap should be fitted as a separate air vent.
To prevent the jacket collapsing if a vacuum is formed, a GESTRA DISCO non-return valve RK should be used as vacuum breaker.

Special requirements of the trap:
- Large start-up and air-venting capacity

Additional requirement:
- In the case of large boiling pans, a separate air vent may be necessary for the steam space; provide a vacuum breaker if it is possible that a vacuum may form.

Recommended traps:
- MK with N capsule
- At extremely low steam pressures (< 0.5 barg): UNA Duplex
- RK as vacuum breaker

Venting:
- MK with H capsule or N capsule

4.10.4 Tilting pans (Fig. 43)

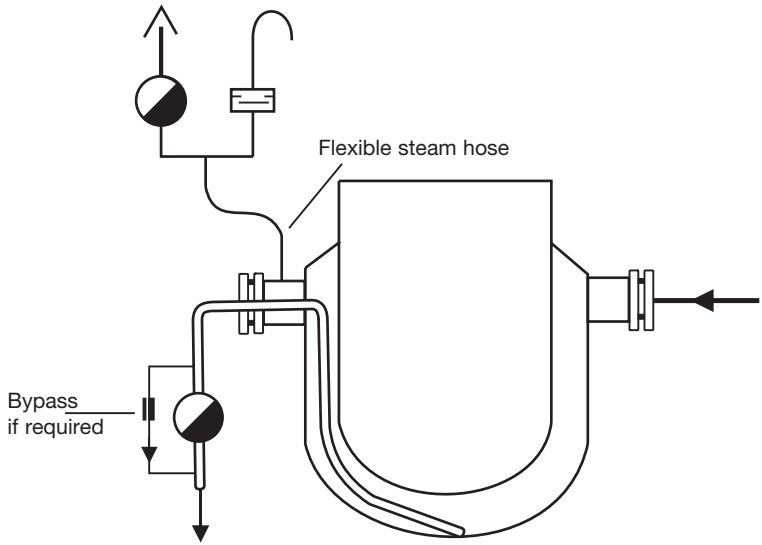

Fig. 43

The condensate is drained via a siphon which starts at the bottom of the steam jacket. The condensate must be lifted to the rotating joint of the pan and hence flow towards the trap. This process requires a trap with a constant and sufficiently large pressure head which if necessary must be produced artificially (e.g. using a bypass for a float trap).

Special requirements of the trap:

- Generation of a sufficient pressure head (the trap should not shut off tight) and good air-venting capacity

Additional requirement:

- For large boiling pans at least, a thermostatic trap should be fitted as additional air vent.
- Vacuum breaker; Section 4.10.3.
- Arrange air venting in the rotating joint opposite to the steam inlet.

Recommended traps:

- UNA Simplex with bypass
- RK as vacuum breaker

Venting:

- MK with H capsule or N capsule

4.11 Brewing Pans (Coppers, Mash Tubs) (Fig. 44)

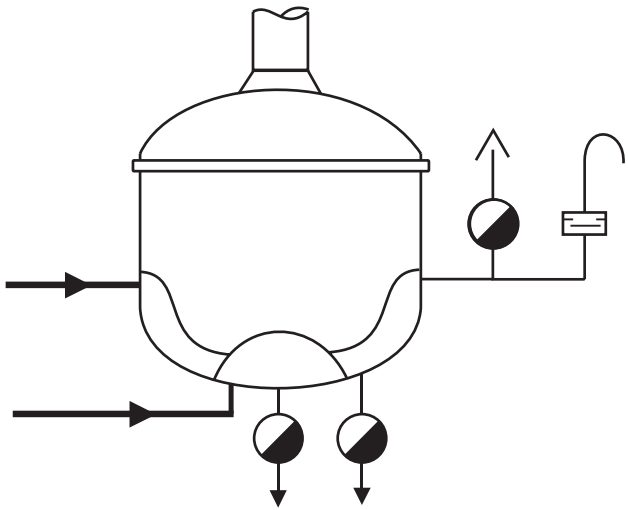

Fig. 44

These are mainly large jacketed heating pans, frequently with various heating zones and different steam pressures.
Characteristics of the mashing process:
- High steam consumption during heating-up,
- alternating with relatively low consumption during cooking.

Characteristics of the brewing process:
- Large steam consumption during heating-up, whereby the pressure may drop (e.g. considerably as a result of overloading of the steam system and possibly also of the steam generator)

This is followed by a uniform steam consumption at constant pressure during the entire evaporation phase. In both cases, a large amount of air has to be discharged at start-up.

Special requirements of the trap:
- Discharge of very large condensate flowrates without any banking-up, to avoid waterhammer and to obtain the full heating capacity at each stage of the evaporation process
- Particularly good air-venting capacity

Additional requirements:
- Separate air-venting of the heating surface with thermostatic traps (type MK)
- Prevent the formation of vacuum

Recommended traps:
- For small and medium pans: UNA 15/16 Duplex.
- For large pans: UNA 4 Duplex, large-capacity trap with thermostatic pilot control, type TK
- RK as vacuum breaker

Venting:
- MK with H capsule

4.12 High-Capacity Evaporators (Fig. 45)

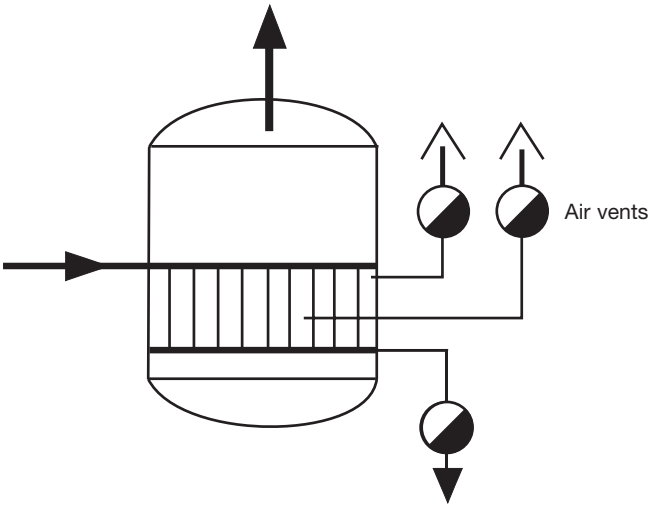

Fig. 45

Besides distilling (see Section 4.13) and brewing (see Section 4.11), there are many industries where evaporation processes are necessary to boil down (i.e. concentrate) the product by evaporating part of its liquid content. This can be effected in a continuous, multiple-effect evaporation plant (e.g. sugar factory) or in batches. During continuous evaporation, apart from the start-up phase, the condensate load remains stable at a relatively constant pressure head. Batch evaporation is different: the condensate load during heating-up is considerably larger (depending on the initial temperature of the product to be heated) than during the evaporation phase, and then remains relatively constant.
To obtain maximum evaporation capacity, proper air-venting of the steam space is important.
In this connection, the following has to be considered:

a) In the case of the continuous process, the vapours of the product to be evaporated – e.g. from an evaporator stage operating at higher pressure – can be reused as heating steam having a correspondingly high percentage of gas;
b) The steam space is relatively large, so that air-venting – even with batch evaporation – by the steam traps without causing steam losses is very difficult. It is therefore recommended that thermostatic traps be fitted as additional air vents for the steam space.

Special requirements of the trap:

- Discharge of large flowrates, often at a very low pressure head
- Good air-venting capacity

Additional requirement:

- Separate air-venting of the steam space

Recommended traps:
- For the continuous evaporation process, the type GK is sufficient (manual stage nozzle; robust and simple design).
- For the batch evaporation process, the TK is better suited (thermostatic pilot control permits automatic adaptation to varying operating conditions).
- For high pressures, UNA Duplex.
- As air vent, MK with N capsule.

4.13 Stills Indirectly Heated (Fig. 46)

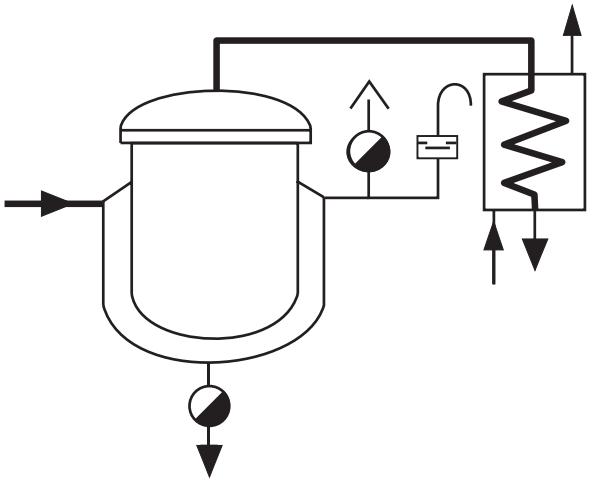

Fig. 46

To obtain maximum evaporation capacity, the heating surface should always be kept free of condensate. Even the slightest banking-up of condensate may considerably affect the capacity of small stills, such as those used in the pharmaceutical industry for the production of essences and in laboratories.

Special requirements of the trap:
- The trap should drain the condensate as it forms, which is of particular importance for small stills and is complicated by the fact that the condensate is relatively hot (very little undercooling).
- A frequent change of the batches requires perfect start-up venting of the still.

Additional requirement:
- It may be necessary to fit a separate air vent and vacuum breaker.

Recommended traps:
- MK with N capsule, UNA 15/16, UNA 4 Duplex
- RK as vacuum breaker

Venting:
- MK with H capsule or N capsule

4.14 Drying Cylinders, Drying Drums

(e.g. for paper machines, calenders, corrugated-cardboard machines) (Fig. 47)

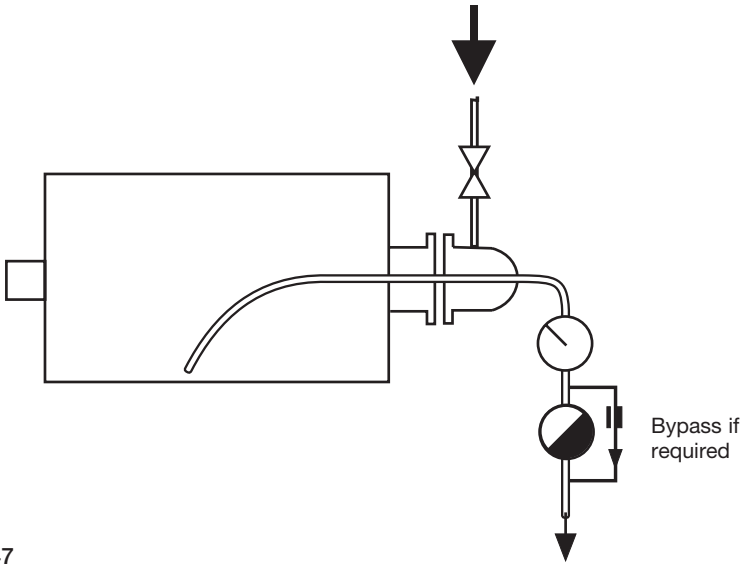

Fig. 47

For drying and glazing processes, exact and uniform maintenance of the required cylinder surface temperature is of prime importance. This can only be obtained by trouble-free condensate drainage from the cylinder. Air concentrations in the cylinder must be avoided, as they would lead to a local reduction in heating temperature and consequently lower surface temperatures. The condensate is lifted from the cylinder by a bucket or a siphon pipe.

If a bucket is used for condensate handling, the steam trap and the pipeline leading to the trap must be able to take up the whole bucket contents to ensure proper drainage. Efficient air-venting of the cylinder, particularly during start-up, is important.

If the cylinder is provided with a siphon, an adequate pressure drop towards the trap must be provided to ensure that the condensate is lifted out of the cylinder. For low-speed machines, a standard thermostatic trap is normally adequate. For high-speed machines, it is necessary to ensure a certain leakage of steam in relation to the rotational speed, in order to prevent formation of a condensate film. This can be done with the BK through adjustment for a certain steam leakage and with the UNA through internal or external bypass.

Special requirements of the trap:

- Automatic air-venting at start-up and during continuous operation
- For cylinders with siphon drainage, the trap must ensure a constant pressure drop (i.e. must not close during operation) and must permit leakage of live steam, particularly at higher cylinder speeds.

Additional requirements:

- The steam trap should be monitored for banking-up of condensate through a sightglass (to be installed upstream of the trap, see GESTRA Vaposcope). In some cases, it is required that the traps do not close when faulty.

Recommended traps:

- UNA Duplex, if necessary with internal or external bypass, with lifting lever and sightglass cover.

4.15 Baths

(e.g. for cleaning and pickling)

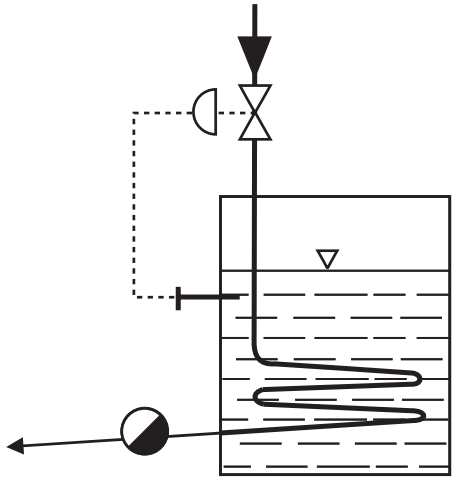

Fig. 48

4.15.1 Heating coils with uniform fall and condensate discharge at base

(Fig. 48)

With this arrangement, waterhammer does not normally occur. For temperature-controlled baths, this is the only recommended arrangement of the heating coils. In general, the following applies to controlled plants: At low heating capacities, when the control valve is throttled strongly, the pressure in the heating coil may drop to vacuum. To prevent banking-up of condensate, as the cause of waterhammer, the condensate should drain by gravity (no back pressure!).

Special requirements of the trap:

- These depend on the operation of the heat exchanger (controlled or uncontrolled).

Recommended traps:

- For simple, manually controlled heating processes: BK, MK with N capsule.
- For controlled heating processes: UNA Duplex, MK with N capsule

4.15.2 Acid baths

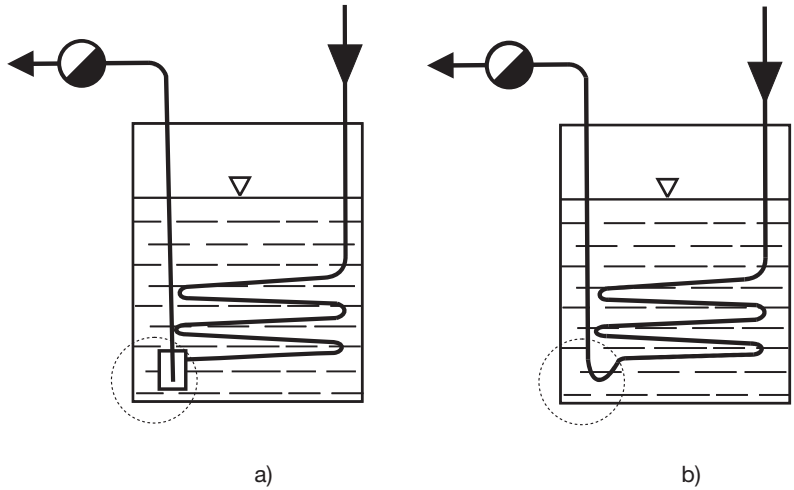

Fig. 49

For safety reasons, the heating coil must not be led through the wall of the vat. The condensate must be lifted (immersion heater principle). To prevent waterhammer, the condensate should fall towards a compensator (see Fig. 49a). For small-sized pipes, it suffices to provide a loop-type water seal (see Fig. 49b).

Special requirements of the trap:

- No intermittent operation, which might cause waterhammer by an abrupt stop or start of the flow

Recommended traps:

- UNA 4 Duplex, with inner bypass
- BK (if the plant layout is unfavourable, the tendency to waterhammer may be eliminated by special adjustment of the trap)
- MK with N capsule

4.16 Band Driers (Fig. 50)

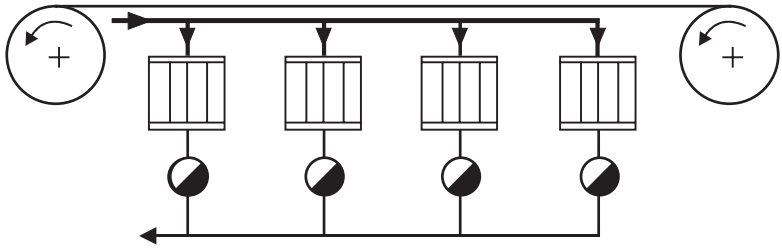

Fig. 50

To obtain the rated drying capacity (guaranteed performance), it is essential that the individual heating units can produce the maximum heat. This implies that the heating surfaces are completely filled with steam and there is no banking-up of condensate and no air in the steam spaces (efficient air-venting). The heating units require individual drainage by means of an appropriate trap. If the flash steam cannot be utilized at all, or only to a limited extent, anywhere else in the plant, it may be useful to heat an additional heating unit (e.g. inlet section) with the flash steam or even with all the condensate formed in the other heaters.
When choosing the steam trap, the small space available for installation should be considered as well as the fact that the fitting of the steam traps inside the machine casing, which is frequently requested, results in relatively high ambient temperatures.

Special requirements of the trap:

- Condensate discharge without any banking-up, even at relatively high ambient temperatures
- Automatic air-venting
- Small dimensions

Recommended traps:

- MK with N capsule
- If there is sufficient space available, UNA Duplex

4.17 Hot Tables, Drying Platens (Fig. 51)

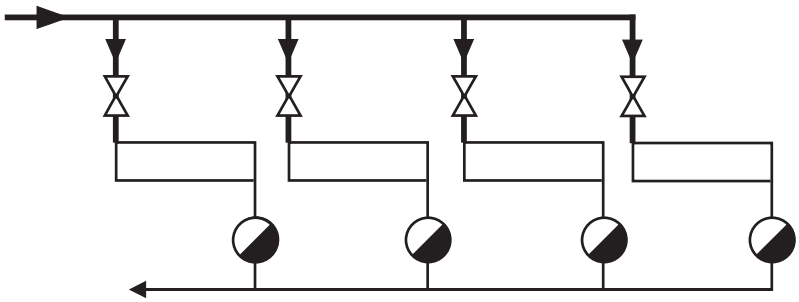

Fig. 51

These are used in many different process plants for drying and heating. The maintenance of uniform surface temperatures which may have to be varied is of fundamental importance.
The best method of achieving this is to connect the different sections in parallel and to provide a separate steam supply and steam trap for each section. This prevents the various sections interfering with each other (e.g. as a result of the different pressure drops).
If they are connected in series, which is often the case, condensate accumulates in the heating platen at the end of the system, which may cause a reduction in the surface temperature. Furthermore, the single steam trap cannot air-vent the sections efficiently. To attain a heating performance which is equivalent to that of a parallel arrangement, at least “blow-through” steam traps are needed.

Special requirements of the trap:

- Condensate discharge without banking-up at relatively high condensate temperatures
- Efficient air-venting

Recommended traps:

- MK with N capsule
- UNA Duplex

4.18 Multi-Platen Presses (Fig. 52)

4.18.1 Multi-platen presses connected in parallel

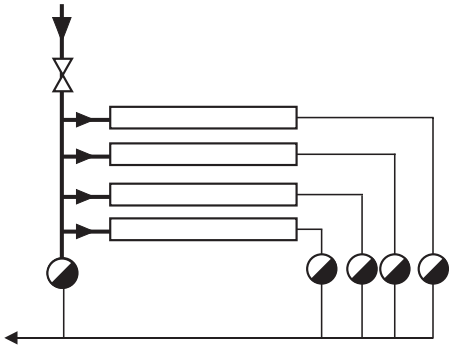

Fig. 52

These presses require uniform and equal temperatures over the complete surfaces of individual platens, and also over all the platens which means that the entire heating surface must be fed with steam of the same heating capacity. The steam should therefore be dry (drainage of steam main!), the steam pressure in all platens must be equal (no air inclusions reducing the partial steam pressure) and the steam space must be free of condensate (poor heat transmission, lower heating temperature than steam). The latter requires a constant and adequate free flow of the condensate towards the trap.
There is no guarantee that the pressure drop across the various platens is the same. To avoid banking-up of condensate, each parallel heating surface should be drained by its own trap.

Special requirements of the trap:

- As the condensate is to be discharged without any banking-up, the steam trap must drain the condensate practically at saturation temperature. At the same time, it must air-vent the plant properly. The faster this is done at start-up, the shorter the heating-up period.

Recommended traps:

- MK with N capsule
- UNA Duplex

4.18.2 Multi-platen presses connected in series (Fig. 53)

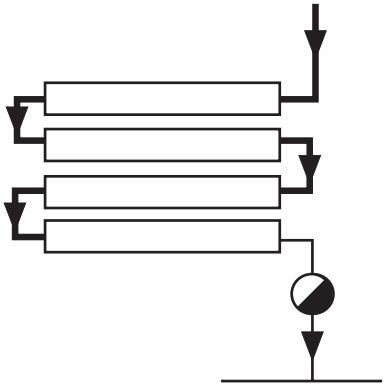

Fig. 53

As already explained in Section 4.18.1, the drainage of heating platens connected in parallel by a single trap is problematic, as this may lead to banking-up of condensate in the individual platens and consequently to a reduction in the surface temperatures (heating temperature).
Small heating platens may be connected in series, provided the condensate is free to flow towards the trap with a constant and adequate fall.

Special requirements of the trap:

- The trap must discharge the condensate as it forms, so that banking-up of condensate in the heating space is reliably avoided.

Recommended traps:

- MK with N capsule
- UNA Duplex

4.19 Tyre Presses (Vulcanizing Presses) (Fig. 54)

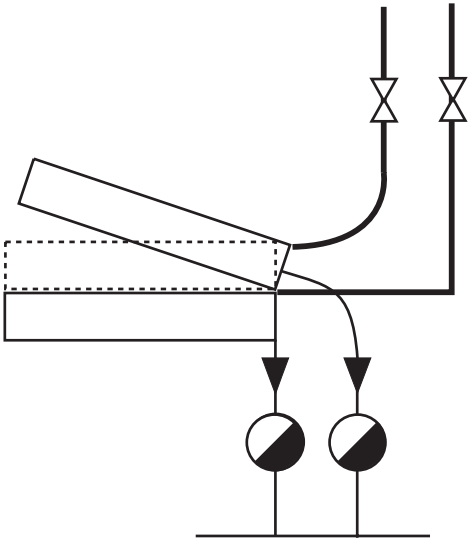

Fig. 54

For vulcanizing, uniform surface temperatures are absolutely vital. This necessitates feeding of the heating surface with pure steam only (no accumulation of condensate in the steam space), equal steam pressures in the individual sections (same temperature drop) and no air inclusions in the steam (i.a. variations in the heat transfer).

The layout of the press as well as the installation of the steam line and the condensate line leading up to the trap should guarantee a free flow of the condensate.

Good steam distribution giving equal steam pressures in the individual sections is not possible unless the sections are connected in parallel. To avoid banking-up of condensate, each section should be drained by its own trap.

Special requirements of the trap:

- Condensate discharge without banking-up, but also without loss of live steam
- Good air-venting capacity (to achieve short heating-up periods)

Recommended traps:

- MK with N capsule

4.20 Vulcanizers (Fig. 55)

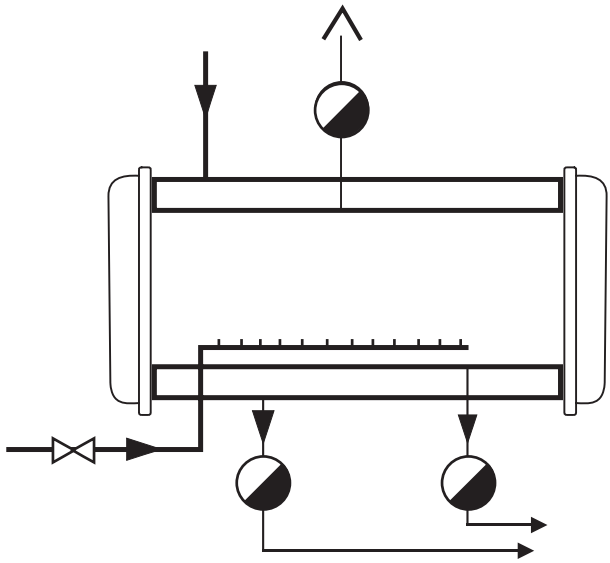

Fig. 55

The jacket and the steam-injected vulcanizing chamber require separate drainage. Draining the jacket is no particular problem.
In general, any steam trap with good air-venting capacity will do the job satisfactorily.
The vulcanizing chamber must be drained completely (see Section 4.21 “Autoclaves”) with-out any condensate remaining. In addition, when selecting the steam trap, it should be noted that the condensate may be acidic.
Separate air-venting of the large chamber by means of a thermostatic trap, in order to prevent temperature stratification, may be of benefit.

Special requirements of the trap:

- Drainage of the chamber without any banking-up of condensate
- Resistant to acid condensate

Additional requirement:

- Efficient air-venting of the steam spaces, whereby the vulcanizing chamber should be vented separately

Recommended traps:

- For the jacket: MK, BK
- For the vulcanizing chamber: MK with N capsule, BK, UNA Duplex
  For contaminated condensate, UNA Duplex is the better choice.
  For acid condensate, the particularly robust BK and UNA Duplex completely of austenitic materials (18 % chromium steel) should be used.
- As air vent, MK with N capsule or H capsule.

4.21 **Autoclaves** (Fig. 56)

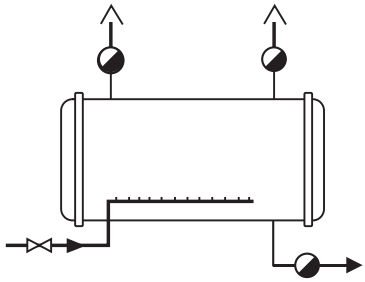

Fig. 56a

The steam is fed directly into the chamber containing the product. There should not be any condensate in the autoclaves, as splashes from the boiling condensate might damage the product and condensate collecting in the bottom of the autoclave may cause high thermal stresses. Frequently, air accumulations in the relatively large steam space (which may lead to layers of varying temperature) cannot be discharged by the steam trap alone. As a rule, the condensate is more or less heavily contaminated.

Special requirements of the trap:

- Condensate discharge without any banking-up, even at start-up, with the low pressures and large amounts of condensate formed; unaffected by dirt; high start-up air-venting capacity

Additional requirement:

- Automatic thermostatic air-vent
- For heavily contaminated condensate, provide a vessel for trapping the dirt particles upstream of the trap (e.g. settling tank with GESTRA blowdown valve; see Fig. 56b)

Recommended traps:

- UNA Duplex
- MK with N capsule

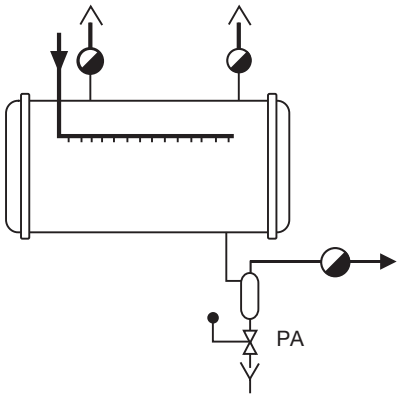

Fig. 56b

4.22 Ironing Presses, Garment Presses (Fig. 57)

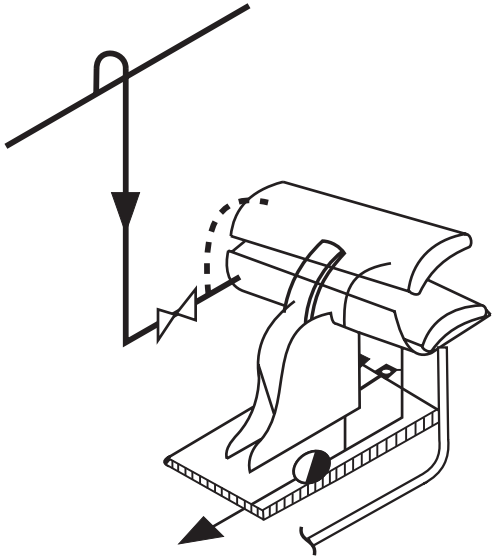

Fig. 57

Here we have to differentiate between presses used only for ironing and those used for ironing and/or steaming.
In the first case, only the heating surfaces have to be drained, which presents no real problems. Most important is that the condensate is free to flow towards the trap.
Fundamental rule: Each ironing unit is drained by its own trap.
Under unfavourable conditions, it may happen that the upper and lower part of a press are not properly drained by a single trap unless the trap is adjusted to provide an adequately large pressure head by passing a slight amount of live steam.
As this causes live-steam wastage, it is more economic in the long run to drain each part individually by its own trap operating without steam loss.
Dry steam is required for the steaming process; if necessary, a steam drier should be mounted upstream of the press. Sudden opening of the steaming valve must not cause carry-over of condensate particles, as this would spoil the garment. If difficulties occur due to a poor plant layout, these may perhaps be compensated by a trap adjusted to pass live steam, which of course leads to steam losses.
The replacement of a trap operating entirely without live-steam loss (e.g. in the case of wet ironing presses) by a trap passing live steam in order to obtain a “dry” press is therefore not recommended.

Special requirements of the trap:
- Operation without steam loss, and as far as possible without banking-up of condensate
- Good air-venting capacity, which reduces the heating-up period when starting the unit

Additional requirement:
- Provide steam driers to obtain dry steam

Recommended traps:
- MK with N capsule

4.23 Steaming Mannequins

(See Section 4.22, steaming process) (Fig. 58)

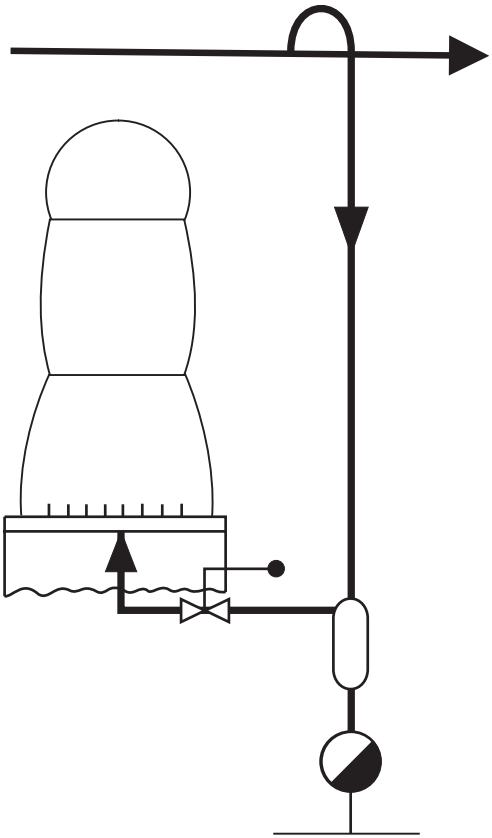

Fig. 58

4.24 Ironers and Calenders
(Hot mangles) (Fig. 59)

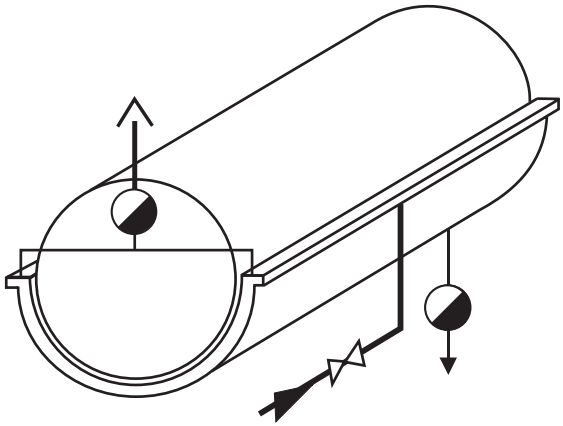

Fig. 59

High and uniform temperatures over the whole heating surface are very important. A large drying capacity is also expected (for a high ironing speed). This requires steam traps discharging the condensate as it forms and efficient air-venting of the bed. For multi-bed machines, each bed should be drained separately by its own trap. As the bed is rather wide, even a trap with a good air-venting capacity may not be able to properly air-vent the bed if live-steam loss is to be prevented. As a result, the temperature drops in some places, mostly at the ends of the bed. Therefore the bed should be air-vented separately at either end by a thermostatic trap.

Special requirements of the trap:

- Condensate discharge without any banking-up, even at high ambient temperatures, as the steam traps are usually installed within the enclosed machine
- Good air-venting capacity, also during continuous operation

Additional requirement:

- Air-venting the beds is of particular importance. Frequently, surface temperatures that are too low can be caused by insufficient air-venting. A good solution is to fit MK traps as thermostatic air vents at both ends of the bed.

Recommended traps:

- UNA Duplex
- MK with N capsule, MK with H capsules for large flowrates (may be required for the first bed)

4.25 Dry-Cleaning Machines (Fig. 59a)

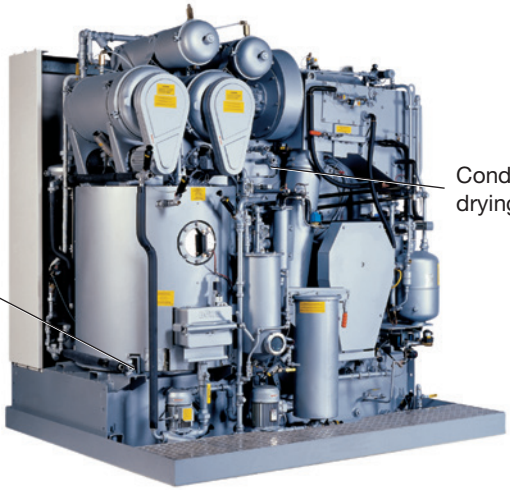

Fig. 59a

The air heater, the still and, if possible, the steam supply line at its lowest point have to be drained. The batch operation requires rapid discharge of the air entering the machine when it is shut down (reduction of the heating-up times). Steam traps ensuring automatic air-venting should therefore be preferred.
Particularly in the still, banking-up of condensate may be undesirable, as the distilling time will be extended. New machines can also present a problem, since there may well be dirt from the manufacturing process (such as welding beads, scale, foundry residues etc.) still left inside the machine.

Special requirements of the trap:

- Condensate discharge without banking-up (particularly important for the still); automatic air-venting
- Unaffected by dirt or protected against dirt particles
- Small dimensions; installation in any position to be able to fit the traps inside the machine without any difficulty
- Unaffected by waterhammer, as the steam is frequently admitted by solenoid valves

Recommended traps:

- MK with N capsule

4.26 Tracer Lines (Fig. 60)

In many cases, the heating steam does not transmit any heat to the product during normal operation. Steam tracing only ensures that in the case of operational disruptions the product temperature does not fall below the minimum temperature allowable.

The condensate flowrate during normal operation is therefore mainly determined by the radiation losses of the condensate line between tracer and steam trap. Noticeable heat savings can therefore be obtained by reducing the heat losses of the condensate lines. Apart from the obvious methods of good insulation and the shortest possible distance between the useful heating surface and steam trap, banking-up in the condensate line (reduction of the area heated by steam) can further limit heat losses. One point, however, must be considered: in the case of operational disruptions, the condensate flowrate can increase considerably, producing a larger accumulation of condensate with a corresponding undercooling. The maximum allowable degree of undercooling depends on the minimum product temperature to be maintained.

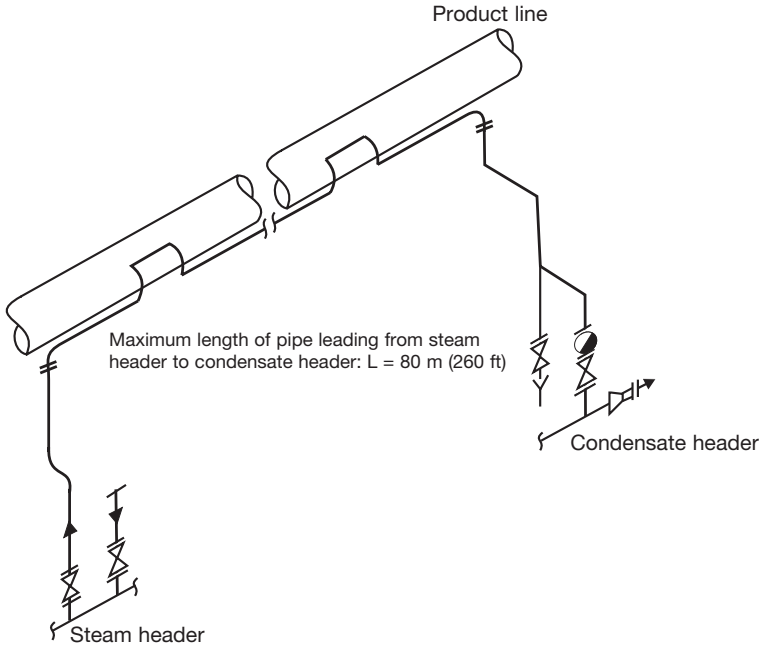

Fig. 60 Maximum length of tracer lines

The maximum length of the tracer lines depends on the number of risers and water pockets as well as on the number of pipe bends. A tracer line with a relatively straight run might have a length of 80 m (260 ft), including the supply line from the steam manifold and the length to the condensate header. In process plants, the tracer lines must be considerably shorter, because of the many risers and changes in direction. The sum of all rising lines should then not exceed 4 m.

For products with pour points < 0 °C, heating is only required if there is frost. The amount of steam required for winterizing can be considerably reduced if, instead of the usual constant heating in the winter period, heating of the product is restricted to periods with actual frost or the imminent risk of frost.

Special requirements of the trap:

- If the heating process permits, a certain amount of banking-up in the condensate line upstream of the trap and caused by the trap, is advantageous (heat savings)

Recommended traps:

- Thermostatic traps only, such as BK, possibly with large undercooling adjustment
- MK with U capsule (t ≈ 30 K below t_s)
- UBK for low discharge temperatures ≥ 80 °C, e.g. with open condensate discharge

4.27 Jacketed Tracing Lines (Fig. 61)

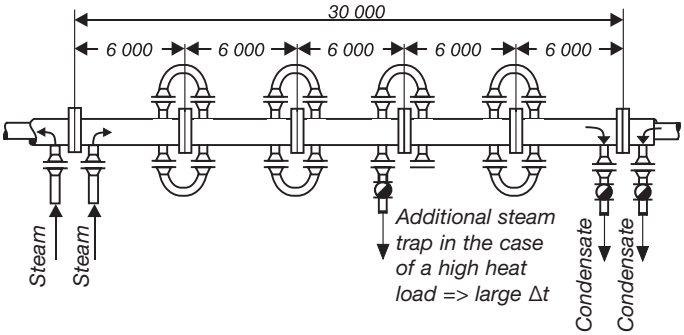

Fig. 61

Jacketed tracing lines are normally used for heating heavy products, such as sulphur and bitumen. The entire heating surface should be fed only with dry steam. Each tracer line should not exceed a length of 30 m (100 ft).

In the case of a large Δt between heating steam and product, the tracer line should be drained at two points.

Special requirements of the trap:

- No banking-up of condensate in the heating surface

Recommended traps:

- BK
- MK with N capsule

4.28 Instrument Tracing (Fig. 62)

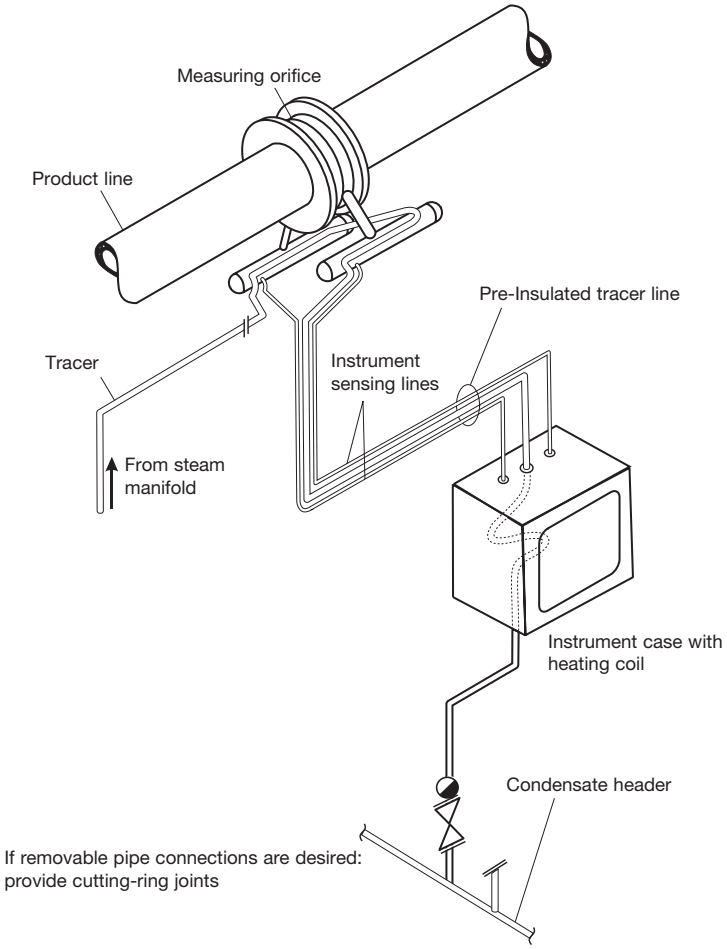

Fig. 62

Instrument tracing in refineries and petrochemical plants is characterized by very small condensate flowrates, while often the individual instruments must be heated only to low temperatures. In this case, the effective heating surface should be heated with condensate only.

Special requirements of the trap:

- Discharge of very low flowrates with a high undercooling

Recommended traps:

- MK with U-type membrane regulator (t ≈ 30 K below saturation temperature)
- UBK with a discharge temperature ≥ 80 °C

4.29 Tank Heating (Fig. 63)

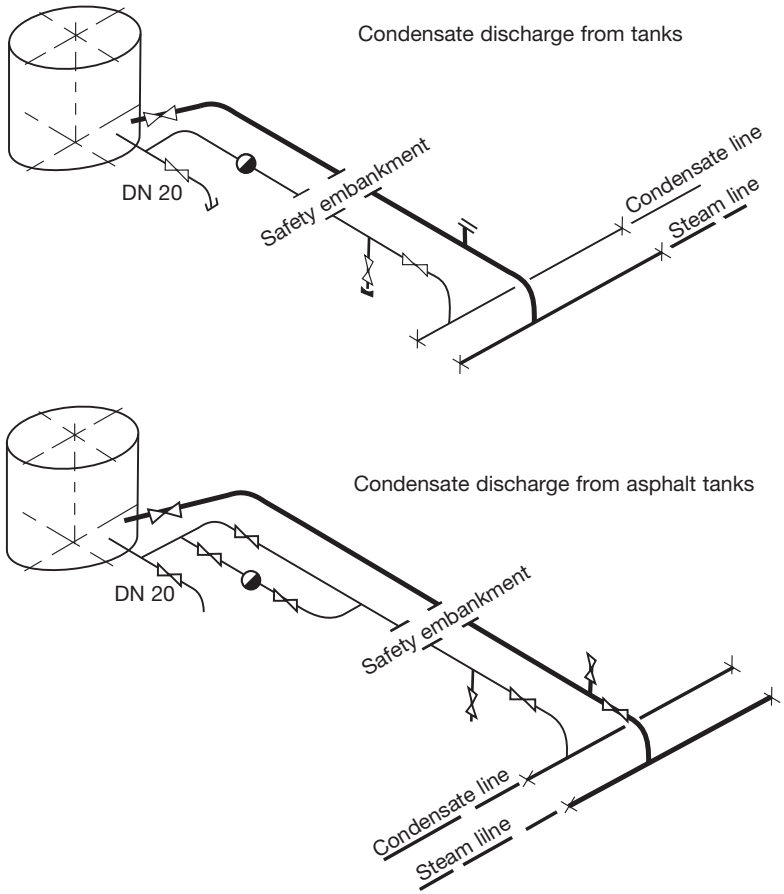

Fig. 63 Condensate discharge from heated tanks

Tank heating may vary considerably, depending on the size and the purpose of the tank.
Heating may be temperature-controlled or uncontrolled, which affects the condensate discharge. Condensate discharge is further influenced by the layout of the heating sections (whether horizontal, in the form of heating coils or finned-tube heaters with little fall towards the trap, or whether vertical or as immersion heating elements).

Uncontrolled heating is frequently applied if little heat is required to maintain the product storage temperature. Because the steam flow is of necessity relatively low (control valve heavily throttled), the pressure in the heating section is decreased considerably. It is possible that the small pressure head available may no longer be sufficient for the trap to completely discharge the condensate. The consequence is banking-up of condensate, which may be desirable for reasons of heat savings (use of the sensible heat of the condensate), but on the other hand may cause waterhammer. As a basic rule for uncontrolled heating systems, the following applies:
It is essential that the heating elements and condensate lines to the trap be arranged to maintain a constant fall in the direction of flow. For the use of the sensible heat of the condensate by banking-up upstream of the trap, vertical heating sections are ideal (no danger of waterhammer). The steam trap should be sized to ensure a sufficient flowrate.
As regards controlled tank heating (with immersion heat exchangers, for instance), in principle the same applies as for storage calorifiers (see Section 4.7). The condensate line leading to the trap should be arranged to provide a constant fall, i.e. no back pressure downstream of the trap.

Special requirements of the trap:

- Discharge of relatively large condensate flowrates, also at a low pressure head
- If necessary and requested, discharge of the condensate with undercooling
- For controlled tanks, a rapid response to fluctuations in pressure and flowrate
- Automatic air-venting
- Ability to withstand frost

Recommended traps:

- For uncontrolled plants: BK, MK with U-type membrane regulator
- TK for large flowrates
- For controlled plants: UNA Duplex, MK with N-type membrane regulator
- MK with H capsules for large flowrates

Page

5. Monitoring of Steam Traps

5.1	Visual Monitoring of the Discharge	83
5.1.1	Checking traps with open discharge by the size of the “steam cloud”	83
5.1.2	Checking with a sightglass downstream of the trap	84
5.1.3	Checking with a sightglass upstream of the trap or with a test set	84
5.1.4	Checking the operation of float traps	84
5.2	Checking by Temperature Measurement	86
5.3	Checking by Sound	86
5.4	Continuous Monitoring of Steam Traps	88

5. Monitoring of Steam Traps

Effective checking that steam traps are operating correctly without banking-up or loss of live steam is a subject often discussed. The many checking methods that are used in practice range from useful to practically useless.

5.1 Visual Monitoring of the Discharge

5.1.1 This involves checking traps with open discharge by the size of the "steam cloud". This is the most uncertain method, since it is not possible t o distinguish between flash steam and live steam. The size of the steam cloud depends mainly on the service pressure and the amount of condensate formed; they determine the amount of flash steam (see Fig. 64).

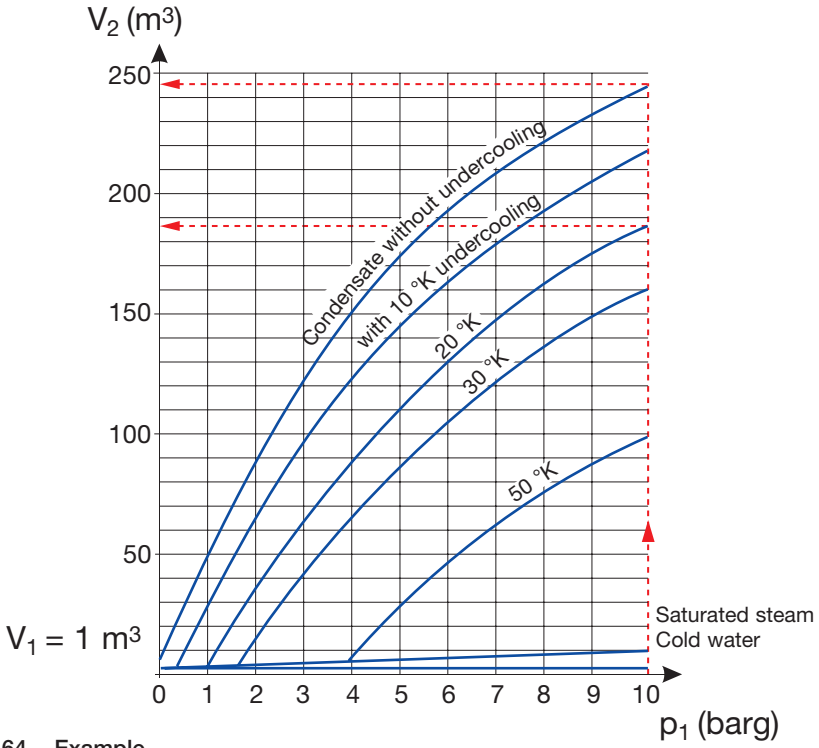

Fig. 64 Example
For an expansion from p_1 = 10 bar to p_2 = 0 bar; the volume of cold water remains practically the same,
that of saturated steam increases from V_1 = 1 m³ to V_2 = 9.55 m³,
that of boiling hot water increases from V_1 = 1 m³ to V_2 = 245 m
(due to the formation of flash steam), and
that of hot water 20 °C below saturation temperature increases
from V_1 = 1 m³ to V_2 = 189 m³.

Particularly at high service pressures, it is impossible to determine whether live steam is escaping with the condensate or not. Only with steam traps operating intermittently (e.g. thermodynamic, disc-type traps) may it be possible to detect a possible change in function through observation over a long period (e.g. increasing wear of the seating surfaces, resulting in a higher lift frequency of the valve disk).

5.1.2 Checking with a sightglass downstream of the trap
In principle, the same applies as mentioned in Section 5.1.1. However, there is even less evidence of trap operation, because in the small sightglass space a small amount of flash steam produces a relatively high flow velocity with the corresponding turbulence. In the case of steam traps operating intermittently, it is only possible to determine whether the trap is open or closing, but not whether live steam is escaping.

5.1.3 Checking with a sightglass upstream of the trap or with a test set
With a properly designed plant, a sightglass installed upstream of the trap enables the steam trap to be checked exactly. Checking is not masked by flash steam. In comparison to sightglasses mounted downstream of the trap, the ones mounted upstream must be capable of higher pressures and therefore also higher temperatures. This requires high-pressure bodies and glasses of high quality, which is an explanation of their higher price.
The Vaposcopes available from the GESTRA product range are suited for visual monitoring of steam traps (see Fig. 65). Vaposcopes installed immediately upstream of the trap ensure ideal monitoring of the trap. They then not only reveal the slightest live steam loss, but also the smallest amount of banking-up of condensate. Banking-up in the condensate line only, however, is of no importance for the heating process. To monitor the heating surface for banking-up, the installation of a second Vaposcope directly at the condensate outlet of the heat exchanger is recommended for the more critical heating processes (see Fig. 66).

5.1.4 Checking the operation of float steam traps
The UNA 4 is available with a sightglass cover, so that it is possible to see whether the trap is waterlogged or whether live steam can escape via its orifice.

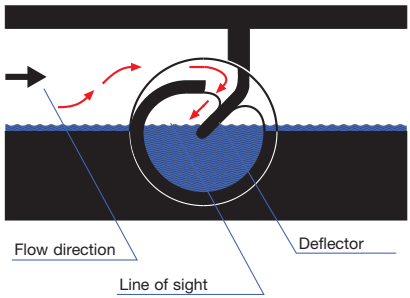

Condensate and steam (gases) moving in the flow direction are forced through the water seal by the fixed deflector. As the specific gravity of steam is lower than that of condensate, the steam depresses the condensate level.

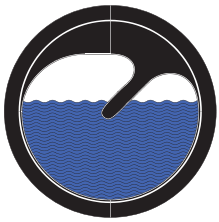

Normal service condition

The deflector is immersed in the water.

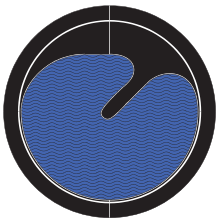

Banking-up of condensate

Complete flooding of the Vaposcope indicates banking-up of condensate. If the Vaposcope is installed immediately downstream of the heat exchanger, it is to be expected that this too will be at least partially filled with water.

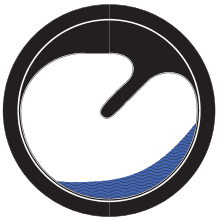

Loss of live steam

The water level is being considerably depressed by passing live steam. The steam, which is invisible, fills the space between deflector and water level.

Fig. 65 Functional principle of the GESTRA Vaposcope

5.2 Checking by Temperature Measurement

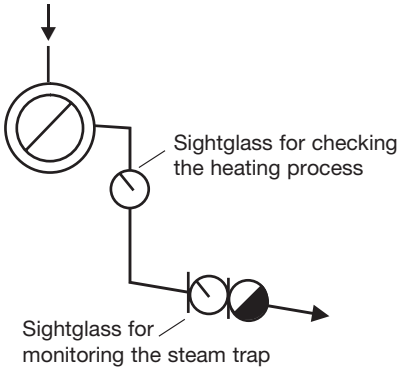

Fig. 66

The measurement of the temperature in the pipeline upstream of the steam trap is another problematic method frequently applied to heat exchangers that have to operate without any banking-up of condensate.
Under certain circumstances, the operation of a trap may be judged by measuring the surface temperature at different points of the pipeline, e.g. immediately upstream of the trap, immediately downstream of the heat exchanger, or at the steam inlet.
It must, however, not be forgotten that the temperature depends on the service pressure at the measurement point, the percentage of incondensable gases in the heating steam (with the consequent reduction in the partial steam pressure and hence the temperature) and the condition of the pipeline surface in the case of surface temperature measurement. When selecting the measurement point, it must also be considered that even without banking-up the condensate temperature may be below the saturated steam temperature.
Measuring the temperature downstream of the trap can only serve as an indication of the pressure in the condensate line. Checking the steam trap by this method is not possible.

5.3 Checking by Sound

The method of checking trap operation by means of a stethoscope, which is quite often encountered, is only of practical use in the case of traps with intermittent operation. With these traps, the opening and closing process can be clearly differentiated. The lift frequency of the valve disc permits conclusions to be drawn as to the mode of operation of the trap; whether live steam is escaping or not, however, cannot be determined.
Ultrasonic measurements of the structure-borne noise produced by the trap are of far greater importance. This method is based on the fact that steam flowing through a throttling element produces higher ultrasonic vibrations than flowing water (condensate) does. The GESTRA Vapophone ultrasonic detector VKP has given proof of its excellent performance.
The mechanical ultrasonic vibrations generated at the seat or orifice of a steam trap are picked up by the probe of the VKP and converted into electrical signals, which are then amplified and indicated on a meter.

When evaluating the measurement results, however, it must be taken into account that the noise intensity depends only partly on the amount of flowing steam. It is also influenced by the condensate amount, the pressure head, and the source of sound, i.e. the trap type. With some experience on the part of the tester, good results are obtained when checking traps with condensate flowrates up to about 30 kg/h and pressures up to 20 bar (290 psi), whereby steam losses as low as approx. 2 - 4 kg/h can be detected.

Fig. 66a Ultrasonic detector for checking steam trap operation – Vapophone VKP 10

Fig. 66b Ultrasonic system for monitoring steam trap operation – TRAP*test* VKP 42

At the body surface of a steam trap, the VKP 10 detects the structure-borne sound of flowing steam. The display is evaluated manually by the operator.
Thanks to the GESTRA ultrasonic detector VKP 42, the checking of steam traps has been automated. The system can be used individually for all types and makes of steam traps. A preprogrammed data collector is used in the system to record the measurement values. Trap-specific software settings are taken into account during the measurement! After the data have been transferred and stored in a PC, their evaluation can commence. Comparison with the historic data within the software package forms the basis of a steam trap management system.

5.4. Continuous Monitoring of Steam Traps

System VKE

The test set VKE is used for monitoring steam traps to detect the leakage of live steam and the banking-up of condensate. A separate test chamber fitted with measuring electrode is installed directly upstream of the steam trap to be monitored. The electrode is then linked to the remote test unit. The VKE test system with test chamber can be used for steam traps of all types and makes.

Operation

The measuring electrode installed in the test chamber signals the states “condensate” or “steam” to the test unit NRA 1-3 (for automatic remote monitoring). If the steam trap operates correctly, condensate flows around the measuring electrode. In the case of steam losses across the trap, the condensate is displaced until the measuring electrode is surrounded by steam. The condition is indicated accordingly. The temperature is monitored by the PT 1000 element integrated in the measuring electrode and any banking up of condensate will be indicated.
The test unit NRA 1-3 has channels for up to 16 steam traps. Each of the connected steam traps can be monitored for live steam losses and banking-up of condensate. Through various modes and inclusion of the plant temperature, the limit values are adapted automatically and faults are detected instantaneously. The maintenance interval is signalled on the front panel of the test unit, and a potential-free relay contact is used for signalling an alarm condition. The test unit is supplied in a case for wall mounting or a case for panel mounting.

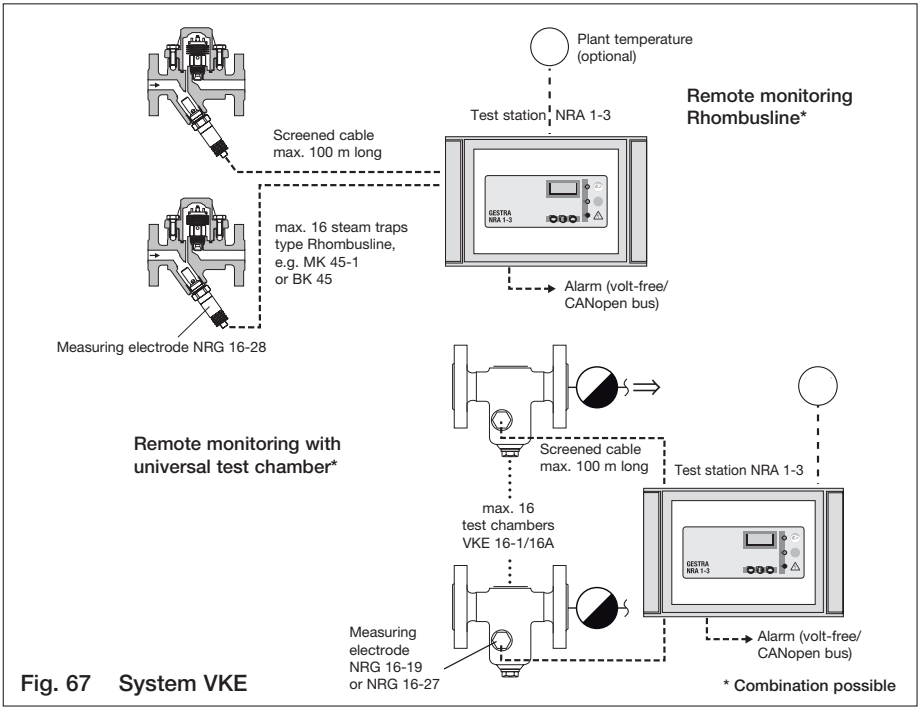

Fig. 67 System VKE

Page

6. Using the Sensible Heat of the Condensate

6.1 Basic Considerations 91

6.2 Examples for the Use of the Sensible Heat of Condensate 91
6.2.1 Banking-up in the heat exchanger 91
6.2.2 Flash-steam recovery (closed condensate system) 93

7. Air-Venting of Heat Exchangers 94

8. Condensate Return Systems 95

6. Using the Sensible Heat of the Condensate

6.1. Basic Considerations

In a steam-heated heat exchanger, normally only the heat of vaporization (latent heat) is transmitted to the product being heated. To achieve the maximum rate of heat transfer, the condensate has to be discharged immediately it is formed. The heat contained in the condensate (the sensible heat) is discharged with the condensate. It forms a considerable percentage of the total heat content, which increases with the pressure. At a service pressure of 1 bar, for example, the proportion of sensible heat is ≈19 % of the total heat content of the steam, whilst at a pressure of 10 barg it is ≈28 % and at a pressure of 18 barg ≈32 % (see steam tables in Fig. 83).

If the condensate is discharged into the open and not re-used, a large part of the heat energy expended for steam generation is lost. In addition, further costs are incurred because the feedwater has to be completely made up.

It is therefore general practice to collect the condensate as far as possible and to re-use it for steam generation or at least as service water for the plant.

The use of the flash steam formed as a result of the pressure drop of the condensate – from the service pressure in the heat exchanger to the pressure of the flash steam arising in the condensate line – poses greater problems. If the condensate is discharged to atmosphere (open condensate system) then flashing, besides being a nuisance to the environment, may lead to considerable heat losses even if the condensate is re-used. Thus the heat losses referred to the total heat energy produced are 3.2 % at a service pressure of 1 bar, 13 % at 10 bar, and 17 % at 18 bar. The amount of flash steam formed at various pressures and back pressures is shown in Fig. 68.

6.2 Examples for the Use of the Sensible Heat of Condensate

6.2.1 Banking-up in the heat exchanger

Through banking-up, part of the heat contained in the condensate is used directly for the heating process. In extreme cases, the amount of heat withdrawn from the condensate can be so high that flashing no longer occurs when the condensate is discharged. A preprequisite for this operational mode is, however, that the desired heating capacity and temperature are reached despite banking-up. In addition, the heat exchanger must be designed to avoid waterhammer (e.g. vertical counterflow heat exchanger or preheater, as shown in Fig. 38).

In heat exchangers without temperature control, banking-up can easily be effected with thermostatic traps discharging the condensate with a given undercooling (BK with undercooling adjustment; MK with U capsule; UBK).

In controlled heat exchangers, the control valve must be fitted on the condensate side and not on the steam side.

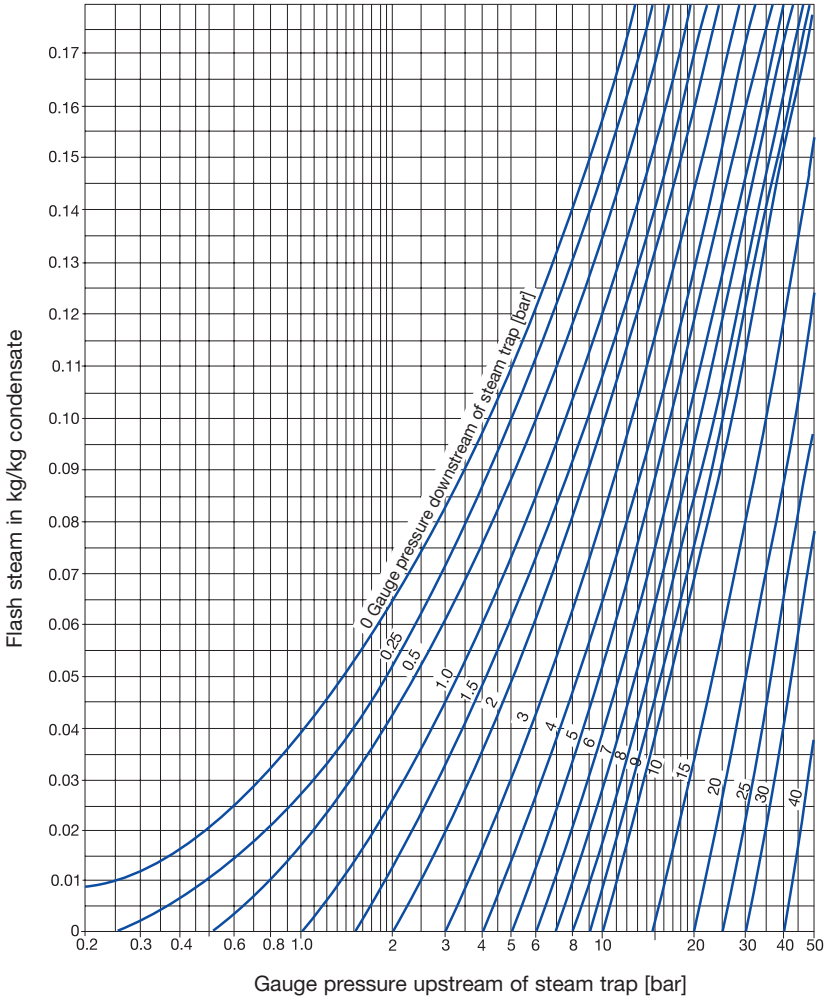

Fig. 68 Amount of flash steam
Amount of flash steam formed when boiling condensate is reduced in pressure.

6.2.2 Flash-steam recovery (closed condensate system). The flash steam is used for heating secondary heat exchangers and the condensate is returned to the boiler as feedwater. This necessitates a steam system with at least two different steam pressures (Fig. 69).

Use of flash steam

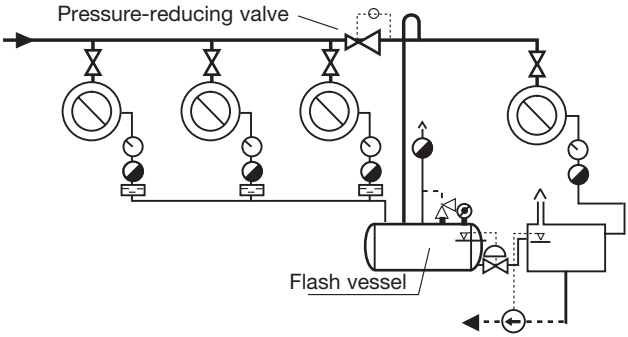

Fig. 69 If the downstream heating surface requires more steam, live steam is added via the pressure-reducing valve.

In smaller plants, the flash steam formed may be completely used in a single heat exchanger, such as a calorifier, counterflow heat exchanger for the production of warm water etc. (see Fig. 70).

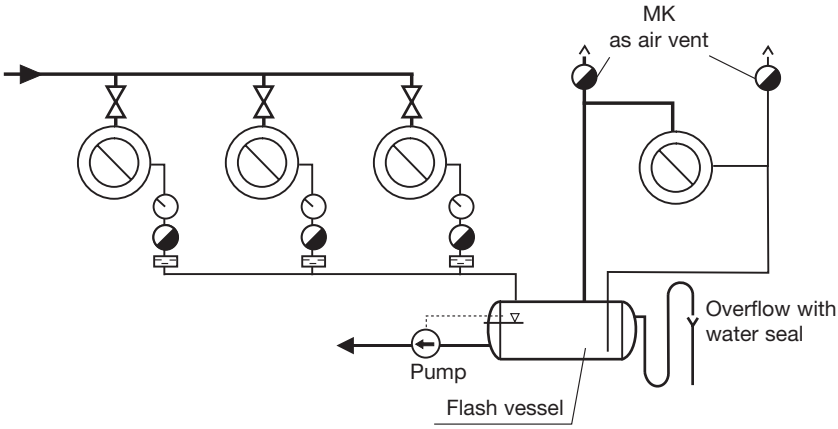

Fig. 70 Simple flash steam recovery with thermosiphon circulation. The amount of flash steam depends on the condensate flowrate and cannot be adapted to varying demand.

7. Air-Venting of Heat Exchangers

Air and other incondensable gases enter a steam plant particularly during periods of shut-down. Insufficient deaeration of the feedwater is another way gases can get into the plant. The use of vapours from evaporation processes as heating steam is yet another cause, as is usual for example in the sugar industry.
Air and the other gases impair the heat transfer and, in addition, reduce the partial pressure of the steam and consequently the steam temperature. If a mixture of steam and air exists, the pressure gauge will indicate the total pressure in the steam space; the temperature measured here, however, corresponds only to the partial steam pressure and is lower than the saturation temperature relative to the total pressure. The heat transfer rate drops in accordance with the reduced temperature difference between steam and product (see Fig. 28).
At a total pressure of 11 bar, for example, the temperature is 183 °C with no air present. The temperature drops to 180 °C with a proportion of air present of 10 % and to ≈ 170 °C with an air proportion of 35 %. We can conclude from this example that the air concentration is highest where the heating surface is coldest. This fact has to be considered when fitting the air vents.
For most small and medium heat exchangers, sufficient air-venting is generally provided by steam traps with automatic air-venting capacity (all GESTRA steam traps ensure automatic deaeration).
In large heat exchangers, such as boiling pans, evaporators and autoclaves, gases tend to concentrate at certain points, owing to the design of the steam space and the resulting flow conditions. In these cases, the steam space has to be deaerated separately at one or several points. GESTRA thermostatic traps of the BK and MK range are perfect as air vents, with the MK type especially suited for saturated steam systems.
To speed up the air discharge from the steam space, it is recommended that an uninsulated pipe having a length of at least 1 m is fitted upstream of the air vent. The increased condensation of the steam in this pipe causes a local concentration of air with a corresponding temperature reduction, so that the trap opens more quickly and wider. An effective arrangement of air vents on a large heat exchanger is shown in Fig. 29.

8. Condensate Return Systems

To convey the condensate back to the steam generating plant, for example, a sufficient pressure head is required, be it purely by gravity, by using the steam pressure or by a combination of both.
In large plants (with large condensate flowrates) and/or if the condensate has to be lifted, the back pressure might rise to an unacceptable level (e.g. in controlled plants, see inter alia Section 4.8.1). In this case, it is best to collect the condensate from the various sections or components of the plant separately.
The condensate from the condensate tank is conveyed to the feedwater tank by level-controlled pumps (see Fig. 71).

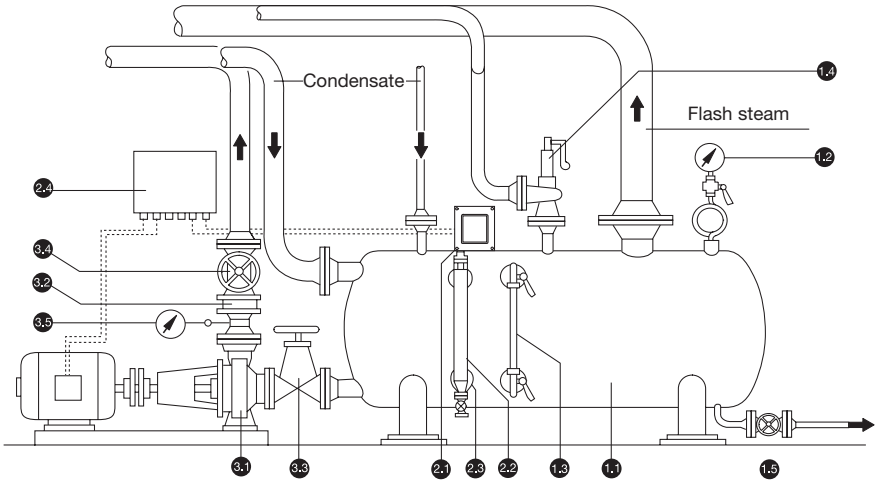

Equipment

1. Condensate recovery system consisting of
1.1 GESTRA condensate tank
1.2 Pressure gauge assembly
1.3 Water-level indicator
1.4 Safety valve
1.5 Drain valve

2. Level control equipment
2.1 GESTRA level-control electrode
2.2 GESTRA measuring pot
2.3 Slide valve
2.4 GESTRA switch cabinet

3. Pump unit
3.1 Condensate pump
3.2 GESTRA DISCO non-return valve
3.3 GESTRA stop valve
3.4 GESTRA stop valve with throttling cone
3.5 Pressure gauge assembly for pressure line

Fig. 71 GESTRA condensate collecting and return systems

To convey small to medium flowrates from distant parts of the plant, the use of a GESTRA condensate return system operating with out a pump is a very economical solution. In this arrangement, steam is used to drive the condensate. The condensate flows into the condensate tank, which is at atmospheric pressure. As soon as the condensate reaches the preset maximum level, a level electrode transmits a closing pulse to the solenoid valve in the vent line and simultaneously an opening pulse to the solenoid valve in the booster steam line. As soon as the minimum condensate level required in the tank is reached, the level electrodes send a signal to close the steam valve and open the air-venting valve (Fig. 72).

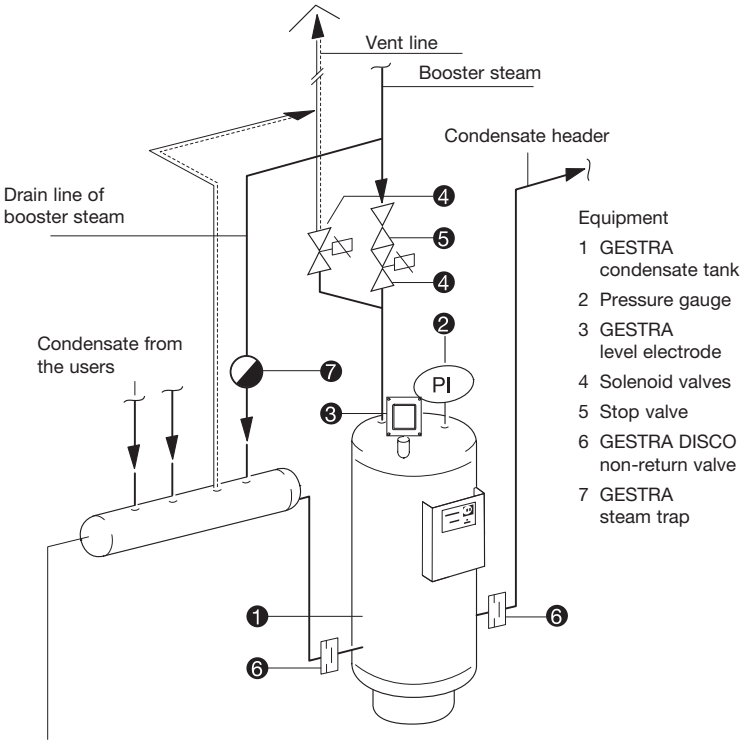

Fig. 72 GESTRA condensate-return system operating without a pump type KH

GESTRA steam-powered condensate-return units type FPS are available with float control requiring no auxiliary electrical energy.

Page

9. Drainage of Compressed Air Plants 99

9. Drainage of Compressed Air Plants

Atmospheric air is always moist to a varying degree, i.e. contains a small amount of water vapour. This amount can be equal to the saturation level, but not higher. The saturation quantity may be expressed as the maximum weight of water vapour in grams contained in 1 cubic metre of air and depends solely on the air temperature (Fig. 73).
The saturation quantity – also called the absolute atmospheric humidity – is identical to the specific gravity of the saturated vapour at this temperature. The saturation limit increases with rising temperatures and decreases with falling temperatures. The amount of vapour exceeding the saturation limit will condense.
The actual weight of water vapour contained in 1 m^3 of air, expressed as a percentage of the maximum amount of water vapour, is the relative humidity (100 % relative humidity = saturation quantity = absolute humidity).

Example:
1 m^3 of saturated air at 23 °C contains 20.5 g of vapour (absolute humidity). If this air is compressed from 1 bara to 5 bara and the air temperature is kept constant at 23 °C by cooling, the air volume will drop to 1/5 m^3. This air volume can no longer hold the 20.5 g of vapour contained in the original 1 m^3 of air, but only 1/5 of it, i.e. 4.1 g. The rest of 20.5 - 4.1 = 16.4 g condenses in the form of water.
The maximum amounts of condensate that are possible at an intake pressure of 0 barg, but with different intake temperatures and a compressed-air temperature of 20 °C, are given in Fig. 74. The values indicated in this table each have to be multiplied with the actual amount of air in m^3, which may have to be derived from the flowrate, e.g. m^3/h or litres/min.

Example:
Every hour, 1000 m^3 of air are compressed to 12 barg. Intake temperature 10 °C, compressor-air temperature 20 °C. According to the table, the maximum amount of condensate is 8.0 g/m^3, i.e. for 1000 m^3/h = 8,000 g/h = 8.0 kg/h.
The water separated from the compressed air has to be removed from the plant, as it would lead to erosion and corrosion, amongst other things. The entire compressed-air system should be drained, as water is continually being separated from the air until the air has cooled down to ambient temperature.
It is recommended that the coolers of the compressors are drained, together with the air receivers, the air lines at regular intervals, and at the lowest points and upstream of risers if the line changes its direction (see Fig. 75).
In all cases where practically dry (and possibly also oil-free) air is required, water separators operating on the centrifugal principle should be used (GESTRA drier and purifier TP) or, for more critical applications, water absorbers. If oil-free air is required in addition, oil absorbers or oil separators should be used.
For automatic drainage, special design combinations of GESTRA float traps are available.

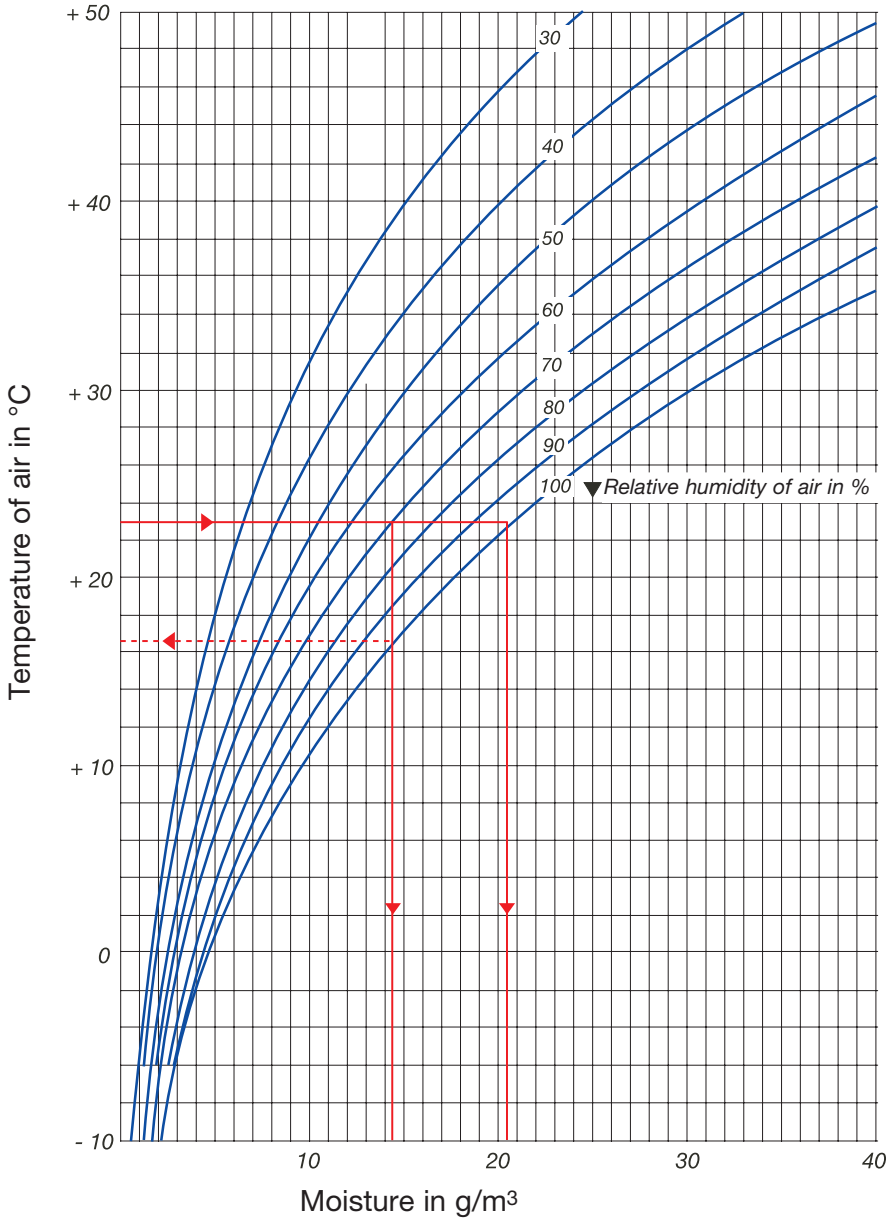

Fig. 73 **Moisture content of air**

In-take tempe-rature	Moisture content at 100 %/ saturation (see Fig. 74)	Maximum amount of condensate in g per m^3 of intake air at service pressure					
		4 bar	8 bar	12 bar	16 bar	22 bar	32 bar
-10 °C	2.14 g/m^3	0	0	0.6	1	1,3	1.5
0 °C	4.84 g/m^3	1	2.7	3.4	3.7	4	4.2
+10 °C	9.4 g/m^3	5.8	7.3	8.0	8.3	8.6	8.8
+20 °C	17.3 g/m^3	13.7	15.3	16.0	16.2	16.5	16.8
+30 °C	30.4 g/m^3	26.9	28.5	29.1	29.4	29.6	29.9
+40 °C	51 g/m^3	47.7	49.1	49.7	50	53	50.5

Fig. 74 Maximum amount of condensate formed in 1 m^3/h of intake air, p = 0 barg, intake temperature see table above, temperature of compressed air 20 °C, moisture content of air on intake = 100 %.

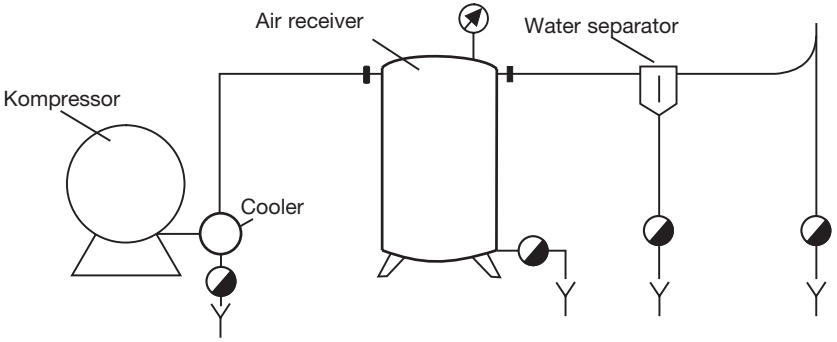

Fig. 75

For the correct drainage of compressed-air lines, the following points have to be considered when laying the pipework and installing the steam traps:

a) The condensate should drain by gravity with a constant slope from the drain point to the trap;

b) The pipeline should be laid to provide a sufficient fall. In horizontal lines, a water pocket may even form in a stop valve. As upstream and downstream of the water pocket there is the same pressure, the water cannot be pushed out, and it becomes a water seal. As a result, the condensate can no longer flow towards the trap;

c) Float traps require a certain condensate level in the trap body to open. This cannot form unless the air pocket has escaped from the body.
With a very small amount of condensate and with a relatively large pipeline (with regard to the flowrate) provided with a sufficient and constant fall (vertical if possible), GESTRA float traps ensure that the air can escape. As condensate enters the trap, air can flow back up the line in the opposite direction to the condensate.
If the amount of condensate formed is rather large, e.g. if the condensate line is completely filled on start-up of the plant or by a surge of water, the air is confined within the trap body. The condensate level required to open the trap is formed rather slowly, if at all, and condensate discharge is insufficient. In this case, it is recommended that a connection be provided between trap and air-line by a “balance pipe”. The air can then escape and the condensate is discharged without any delay (Fig. 76).

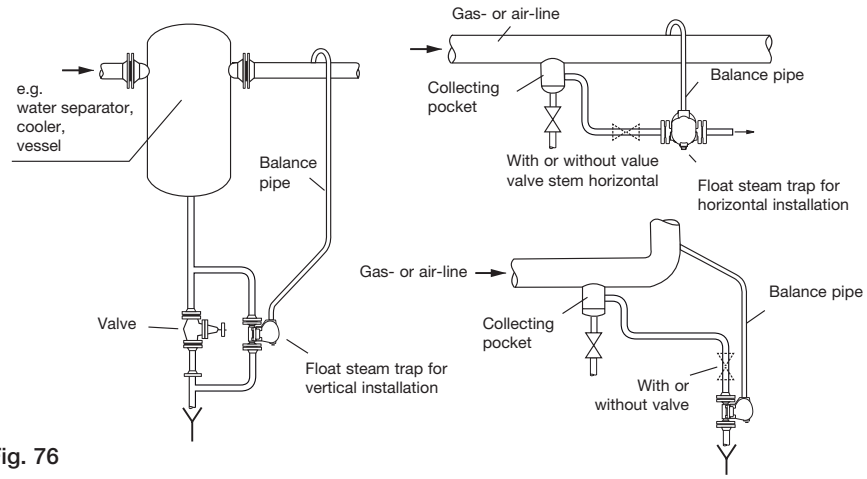

Fig. 76

d) Small oil quantities, as are normally contained in the air of oil-lubricated compressors, do not impair the operation of the GESTRA traps. If the condensate is heavily oil-contaminated, the installation of a settling tank upstream of the trap is recommended. There the oil foam may be discharged from time to time, e.g. by a hand-operated valve (Fig. 77).

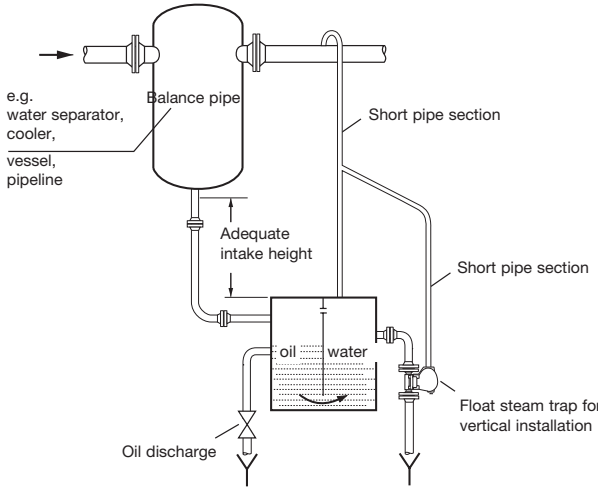

Fig. 77

Instead of the steam trap, it is also possible to use e.g. a solenoid valve operated by a timing relay. This valve is opened for a few seconds at predetermined intervals. The outflowing air will at the same time clean the valve seat. Note: Air losses!

e) Outdoor plants: Provide heating for pipeline and traps, otherwise there is the danger of freezing.
Before commissioning a new plant for the first time, fill the float trap with water.

Page

10. Sizing of Condensate Lines

10.1 Basic Considerations 107

10.2 Examples 113

10. Sizing of Condensate Lines

10.1 Basic Considerations

10.1.1 The diameter of the pipeline between the heat exchanger and the steam trap is normally chosen to fit the nominal size of the required trap.

10.1.2 When choosing the diameter of the condensate line downstream of the trap, flashing has to be considered. Even at very low pressure differentials, the volume of flash steam is many times that of the liquid if the condensate is practically at saturation temperature (e.g. during flashing from 1.2 bara to 1.0 bara, the volume increases approximately 17 times).
In these cases, it is sufficient to dimension the condensate line solely in accordance with the amount of flash steam formed. The flow velocity of the flash steam should not be too high, otherwise waterhammer (e.g. through the formation of waves), flow noises and erosion may occur.
A flow velocity of 15 m/s at the end of the pipeline before the inlet into the collecting tank or pressure-relief unit is a useful empirical value.
The required inside diameter of the pipeline can be taken from Fig. 78.
For long pipelines (> 100 m) and large condensate flowrates, the pressure drop should be calculated to prevent the back pressure becoming too high; here the velocity of the flash steam may be used as a basis for the calculations (Figs. 79 and 80).

10.1.3 When the condensate is mainly in the liquid state (e.g. high degree of undercooling, extremely low pressure), the flow velocity of the condensate should, if possible, be rated at 0.5 m/s when determining the pipeline diameter. The nominal pipe diameter as a function of the selected flow velocity can be chosen from the chart in Fig. 81. If the condensate is pumped, the condensate in the pump discharge line can only be in the liquid phase.
For choosing the pipeline diameter, the mean velocity can be rated at 1.5 m/s. Again, the chart in Fig. 81 may be used to obtain the nominal pipe diameter.

State of the condensate before flashing		Pressure at the end of the condensate line [bar absolute]																					
Pressure bar absolute	Boiling temperature °C	0.2	0.5	0.8	1.0	1.2	1.5	2.0	2.5	3.0	3.5	4.0	4.5	5.0	6	7	8	9	10	12	15	18	20
1.0	99	35.7	16.0	7.4																			
1.2	104	37.9	18.0	10.0	6.1																		
1.5	111	40.1	20.6	12.9	9.5	6.8																	
2.0	120	44.2	23.5	15.8	12.6	10.3	7.6																
2.5	127	46.8	25.5	17.7	14.5	12.3	9.2	5.3															
3.0	133	48.8	27.1	19.2	16.0	13.9	10.7	7.3	4.5														
3.5	138	50.4	28.4	20.4	17.1	15.0	11.9	8.5	6.0	3.8													
4.0	143	52.0	29.6	21.5	18.2	18.0	12.9	9.7	7.3	5.3	3.5												
4.5	147	53.3	30.5	22.3	19.0	16.9	13.7	10.5	8.1	6.3	4.7	3.0											
5	151	54.3	31.5	23.1	19.8	17.7	14.4	11.2	8.9	7.1	5.6	4.2	2.8										
6	155	55.7	32.3	23.9	20.5	18.4	15.2	11.9	9.6	7.9	6.5	5.1	4.0	2.7									
7	158	56.5	33.0	24.5	21.1	18.9	15.7	12.4	10.1	8.4	7.0	5.7	4.6	3.5	2.1								
8	170	59.9	35.5	26.7	23.1	20.9	17.6	14.2	11.9	10.2	8.9	7.7	6.7	5.8	4.8	4.0							
9	175	61.3	36.4	27.5	23.9	21.7	18.3	14.9	12.6	10.9	9.5	8.4	7.4	6.6	5.5	4.8	2.4						
10	179	62.3	37.2	28.2	24.6	22.3	18.9	15.5	13.1	11.4	10.0	8.9	7.9	7.1	6.0	5.3	3.3	2.1					
12	187	64.4	38.7	29.5	25.7	23.5	19.9	16.5	14.1	12.3	11.0	9.8	8.9	8.0	7.0	6.2	4.5	3.6	2.8				
15	197	66.9	40.5	31.0	27.2	24.8	21.5	17.7	15.2	13.4	12.0	10.8	9.9	9.1	8.0	7.2	5.6	4.8	4.2	2.9			
18	206	69.0	42.0	32.3	28.4	26.0	22.3	18.7	16.2	14.3	12.9	11.7	10.8	9.9	8.8	8.0	6.5	5.7	5.1	3.9	2.5		
20	211	70.2	42.9	33.0	29.0	26.6	22.9	19.2	16.7	14.8	13.4	12.2	11.2	10.4	9.2	8.4	7.0	6.2	5.6	4.4	3.1	1.7	
25	223	72.9	44.8	34.7	30.6	28.1	24.2	20.4	17.9	15.9	14.5	13.2	12.2	11.4	10.2	9.3	7.9	7.1	6.5	5.4	4.2	3.1	2.5
30	233	75.1	46.3	36.0	31.8	29.2	25.3	21.4	18.8	16.8	15.3	14.0	13.0	12.1	10.9	10.0	8.6	7.8	7.2	6.1	4.9	4.0	3.4
35	241	76.8	47.5	37.0	32.7	30.1	26.1	22.1	19.5	17.5	15.9	14.6	13.6	12.7	11.4	10.5	9.2	8.4	7.8	6.7	5.5	4.5	4.0
40	249	78.5	48.7	38.0	33.6	31.0	26.9	22.9	20.1	18.1	16.5	15.2	14.1	13.2	12.0	11.0	9.7	8.6	8.2	7.1	6.0	5.0	4.5
45	256	80.0	49.7	38.8	34.4	31.7	27.5	23.5	20.7	18.6	17.0	15.7	14.6	13.7	12.4	11.4	10.1	9.3	8.6	7.5	6.3	5.4	4.9
50	263	81.4	50.7	39.6	35.2	32.5	28.2	24.1	21.2	19.1	17.5	16.2	15.1	14.2	12.8	11.8	10.5	9.6	9.0	7.9	6.7	5.7	5.2

To determine the actual diameter (mm), the above values must be multiplied with the following factors:

kg/h	100	200	300	400	500	600	700	800	900	1.000	1.500	2.000	3.000	5.000	8.000	10.000	15.000	20.000
Factor	1.0	1.4	1.7	2.0	2.2	2.4	2.6	2.8	3.0	3.2	3.9	4.5	5.5	7.1	8.9	10.0	12.2	14.1

Fig. 78 **Sizing of condensate lines** (calculation examples on page 107 and following)
Basic assumptions for determining the inside pipe diameter:
1. Only the flash steam amount is considered.
2. The flow velocity of the flash steam is assumed to be 15 m/s.

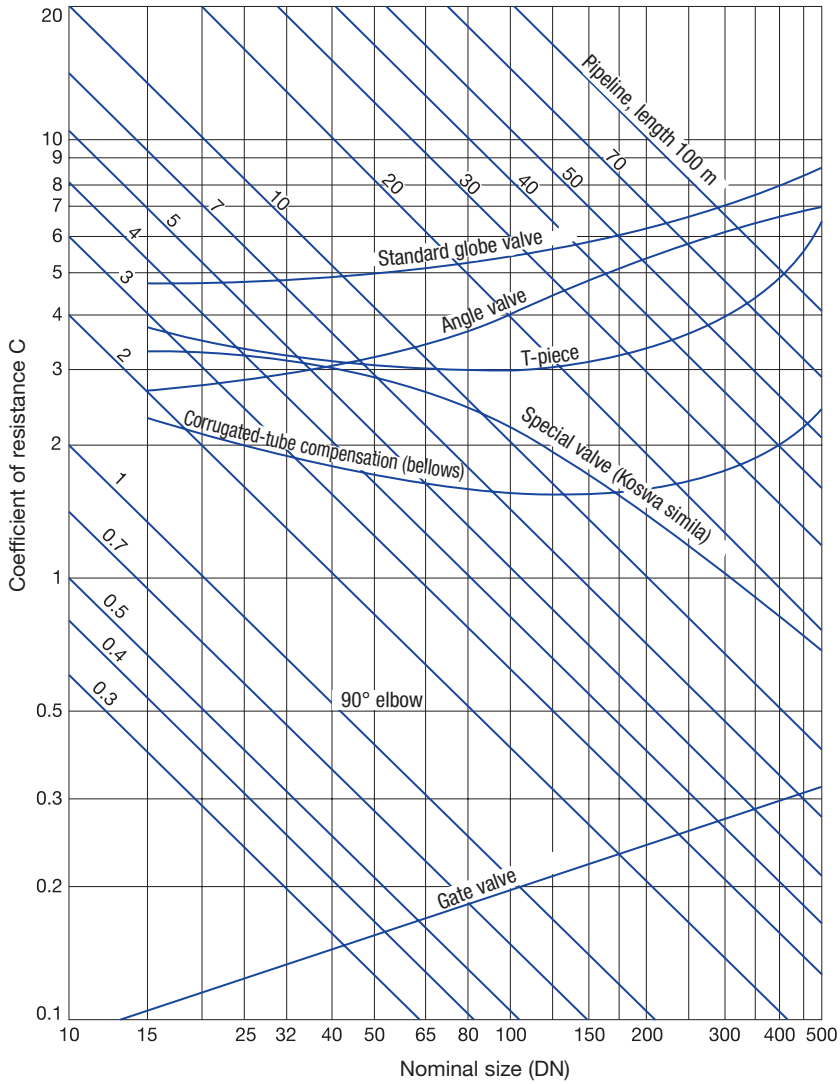

Fig. 79 Pressure drop in steam lines
The coefficients of resistance C for all pipeline components of the same size are read from Fig. 80. The total pressure drop Δp in bar can be determined from the sum of all individual components ∑C and the operating data; see Fig. 81.

Example.

Pipeline components DN 50:

Pipeline length 20 m	C = 8.11
1 angle valve	C = 3.32
2 special valves	C = 5.6
1 tee-piece	C = 3.1
2 elbows 90°	C = 1.0
	∑C = 21.1

Operating data:

Temperature	t = 300 °C
Steam pressure, abs.	p = 16 bar
Velocity	w = 40 m/s

Result Δp = 1.1 bar

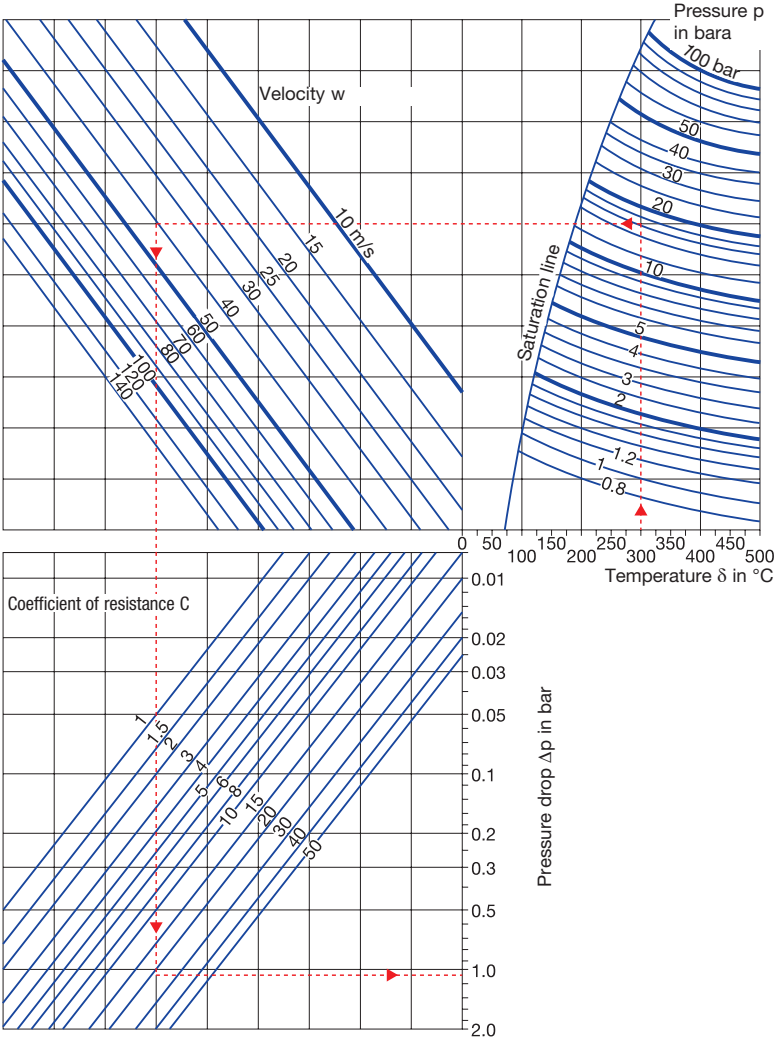

Fig. 80

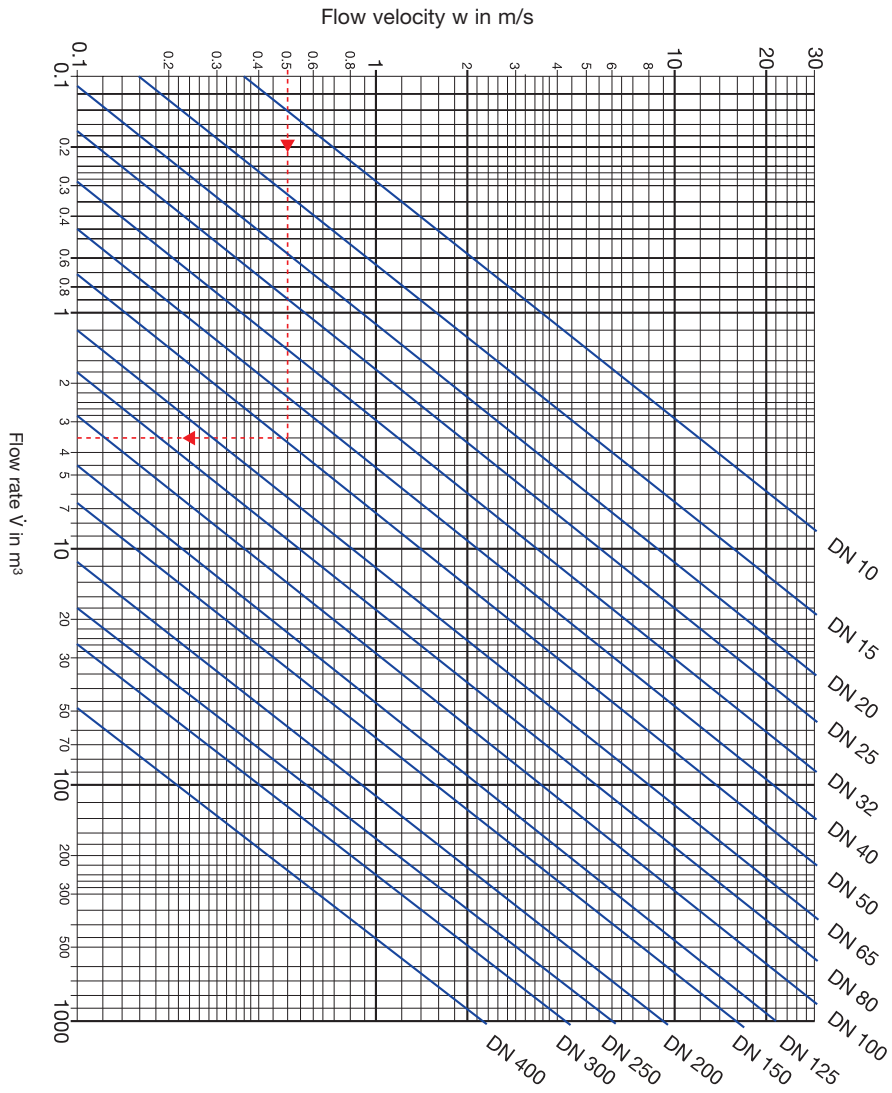

Fig. 81 Flowrates in pipelines

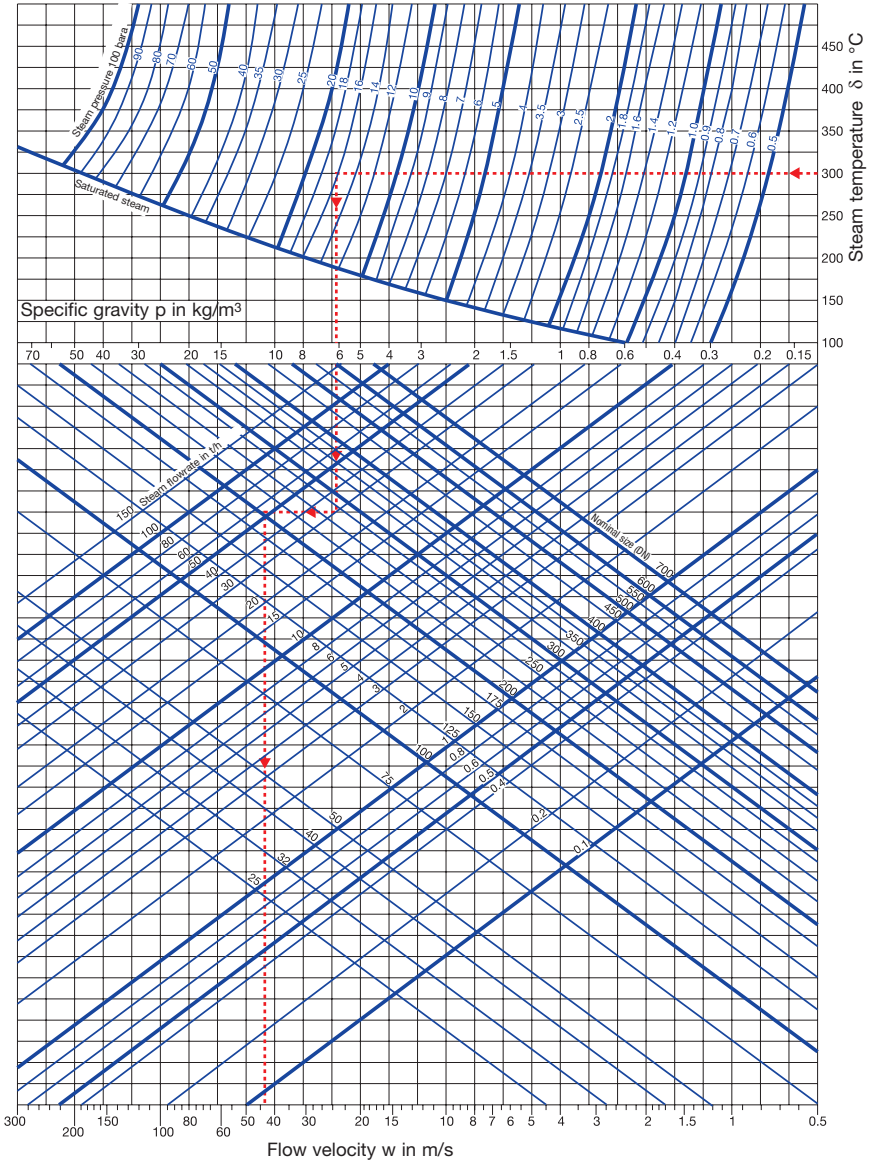

Fig. 82 **Flow velocity in steam lines**
Example: **Steam temperature 300 °C, steam pressure 16 bara, steam flowrate 30 t/h, nominal size (DN) 200.**
Result: **Flow velocity = 43 m/s.**

10.2 Examples

10.2.1 Choosing the pipe size from the amount of flash steam

10.2.1.1 Pressure before flashing (service pressure) 5 bara, pressure at end of condensate line 1.5 bara, condensate temperature approximately at boiling temperature, corresponding to 151 °C
Condensate flowrate 1200 kg/h
From Fig. 78, Table 1, the pressure coefficient = 14.4.
From Fig. 78, Table 2, the flowrate factor for 1200 kg = 3.5.
Therefore
diameter = 14.4 x 3.5 = 50.4 mm
Choose **DN 50 mm**.

10.2.1.2 Same operating data as for 10.2.1.1, but condensate with 20 K undercooling (20 K below t_s).
According to Table 1, the boiling temperature at 5 bar is 151 °C, and so the actual condensate temperature is 151 - 20 = 131 °C, and the pressure coefficient at 131 °C ≈ 10.2
(by interpolation of diameter coefficients at 127 °C and 1.5 bar back pressure = 9.2
and at 133 °C at 1.5 bar back pressure = 10.7),
multiplied by the factor 3.5 (from Table 2 for 1200 kg/h)
this yields a diameter of 10.2 x 3.5 = 35.7 mm.
Choose **DN 40 mm**.

10.2.2 Choosing the pipe size from the water flowrate, i.e. if there is no or hardly any flash steam being formed.
Same operating data as for 10.2.1.1 above, i.e. condensate flowrate 1200 kg/h ≈ 1200 l/h ≈ 1.2 m^3/h, upstream pressure 5 bara, back pressure 1.5 bara, but condensate with 40 K undercooling (40 K below saturation temperature).
According to Fig. 78, Table 1, the boiling temperature at 5 bar is 151 °C; therefore the actual condensate temperature is 151 - 40 = 111 °C,
the boiling temperature at 1.5 bar = 111 °C, and hence no flash steam is formed.
Now determine the diameter of the condensate line from Fig. 81, based on a flow velocity of 0.5 - 0.6 m/s.
Choose **DN 25 mm**.

Absolute pressure p, bara	Temperature t_s, °C	Steam volume v", m³/kg	Steam density ρ", kg/m³	Enthalpy of water h', kJ/kg	Enthalpy of steam h", kJ/kg	Heat of evaporation r, kJ/kg
0.10	45.84	14.6757	0.06814	191.83	2584.8	2392.9
0.15	54.00	10.0231	0.09977	225.97	2599.2	2373.2
0.20	60.08	7.6511	0.1302	251.45	2609.9	2358.4
0.25	64.99	6.2035	0.1612	271.99	2618.3	2346.3
0.30	69.12	5.2301	0.1912	289.30	2625.4	2336.1
0.40	75.88	3.9936	0.2504	317.65	2636.9	2319.2
0.50	81.35	3.2404	0.3086	340.56	2646.0	2305.4
0.60	85.95	2.7315	0.3661	359.93	2653.6	2293.6
0.70	89.97	2.3646	0.4229	376.77	2660.1	2283.3
0.80	93.52	2.0868	0.4792	391.72	2665.8	2274.0
0.90	96.72	1.8692	0.5350	405.21	2670.9	2265.6
1.00	99.64	1.6938	0.5904	417.51	2675.4	2257.9
1.50	111.38	1.1590	0.8628	467.13	2693.4	2226.2
2.00	120.23	0.8857	1.129	504.70	2706.3	2201.6
2.50	127.43	0.7184	1.392	535.34	2716.4	2181.0
3.00	133.54	0.6057	1.651	561.43	2724.7	2163.2
3.50	138.87	0.5241	1.908	584.27	2731.6	2147.4
4.00	143.62	0.4623	2.163	604.67	2737.6	2133.0
4.50	147.92	0.4137	2.417	623.16	2742.9	2119.7
5.00	151.84	0.3747	2.669	640.12	2747.5	2107.4
5.50	155.46	0.3367	2.920	655.78	2751.7	2095.9
6.00	158.84	0.3155	3.170	670.42	2755.5	2085.0
7.00	164.96	0.2727	3.667	697.06	2762.0	2064.9
8.00	170.42	0.2403	4.162	720.94	2767.5	2046.5
9.00	175.35	0.2148	4.655	742.64	2772.1	2029.5
10.00	179.88	0.1943	5.147	762.61	2776.2	2013.6
11.00	184.05	0.1774	5.637	781.13	2779.7	1998.5
12.00	187.95	0.1632	6.127	798.43	2782.7	1984.3
13.00	191.60	0.1511	6.617	814.70	2785.4	1970.7
14.00	195.04	0.1407	7.106	830.08	2787.8	1957.7
15.00	198.28	0.1316	7.596	844.67	2789.9	1945.2
16.00	201.36	0.1237	8.085	858.56	2791.7	1933.2
17.00	204.30	0.1166	8.575	871.84	2793.4	1921.5
18.00	207.10	0.1103	9.065	884.58	2794.8	1910.3
19.00	209.78	0.1047	9.555	896.81	2796.1	1899.3
20.00	212.37	0.0995	10,05	908.59	2797.2	1888.6
21.00	214.84	0.0948	10.54	919.96	2798.2	1878.2
22.00	217.24	0.0907	11.03	930.95	2799.1	1868.1
25.00	223.93	0.0799	12.51	961.96	2800.9	1839.0
30.00	233.83	0.0666	15.01	1008.4	2802.3	1793.9
40.00	250.33	0.0498	20.10	1087.4	2800.3	1712.9
50.00	263.91	0.0394	25.36	1154.5	2794.2	1639.7
60.00	275.56	0.0324	30.83	1213.7	2785.0	1571.3
70.00	285.80	0.0274	36.53	1267.4	2773.5	1506.0
80.00	294.98	0.0235	42.51	1317.1	2759.9	1442.8
90.00	303.32	0.0205	48.79	1363.7	2744.6	1380.9
100.00	310.96	0.0180	55.43	1408.0	2727.7	1319.7
120.00	324.63	0.0143	70.01	1491.8	2689.2	1197.4
140.00	336.36	0.0115	86.99	1571.6	2642.4	1070.7
160.00	347.32	0.0093	107.4	1650.5	2584.9	934.3
180.00	356.96	0.0075	133.4	1734.8	2513.9	779.1
200.00	365.70	0.0059	170.2	1826.5	2418.4	591.9
220.00	373.69	0.0037	268.3	2011.1	2195.6	184.5
221.20	374.15	0.0032	315.5	2107.4	2107.4	0

Fig. 83 Steam table
(The detailed steam tables are commercially available.).

Page

11. Sizing of Steam Lines 117

12. Calculation of Condensate Flowrates

12.1 Basic Formulae (SI Units) 118

12.2 Sizing of Steam Traps 121

11. Sizing of Steam Lines

When sizing steam lines, care must be taken that the pressure drop between the boiler and steam users is not too high. The pressure drop depends mainly on the flow velocity of the steam.

The following empirical values for the flow velocity have proven to be satisfactory:

Saturated steam lines	20 - 40 m/s
Superheated steam lines	35 - 65 m/s

The lower values should be used for smaller flowrates.

For a given flow velocity, the required pipe diameter can be chosen from the chart in Fig. 82.

The expected pressure drop can be calculated from the charts in Figs. 79 and 80.

12. Calculation of Condensate Flowrates

12.1 Basic Formulae on the Basis of SI Units [J, W]

12.1.1 If the amount of heat required is known (e.g. specified on the name plate of the heat exchanger), then the condensate flowrate per hour $\dot{M}$ can be calculated from

$$\dot{M} = 1{,}2 \cdot \frac{kW}{2100} \cdot 3600 \qquad [kg/h]$$

and hence

$$\dot{M} \approx 2{,}1 \cdot kW \qquad [kg/h]$$

Here kW is the amount of heat required in kJ/s (kilo-Joule per second) and the quotient 2100 is the latent heat of steam kJ/kg for medium pressures; the factor 1.2 is added to compensate for heat losses.

12.1.2 If the amount of heat $\dot{Q}$ required per hour is not known, it can be calculated from the weight $\dot{M}$ of the product to be heated up in one hour, the specific heat

$$c \left[\frac{kJ}{kg\ K}\right]$$

and the difference between the initial temperature t_1 and the final temperature t_2 ($\Delta t = t_2 - t_1$) as follows:

$$\dot{Q} = \dot{M} \cdot \frac{c}{3600} \cdot \Delta t \qquad [kW]$$

Example:
50 kg of water are to be heated from 20 °C to 100 °C in one hour.
The amount of heat required is

$$\left(c_{water} = 4{,}190 \frac{kJ}{kg\ K}\right)$$

$$\dot{Q} = 50 \cdot \frac{4{,}190}{3600} \cdot (100 - 20) = 4{,}656 \ [kW]$$

The amount of condensate is then

$$\dot{M} = 2{,}1 \cdot 4{,}656 \approx 9{,}8 \ [kg/h]$$

Now if the 50 kg of hot water are to be vapourized in one hour, the latent heat of approx. 2100 kJ/kg has to be added.

$$\dot{Q} = 50 \cdot 2100 = 105.000 \text{ kJ/h} = \frac{105.000}{3600} = 29{,}167 \quad [\text{kW}]$$

The total amount of heat required, and consequently the total amount of condensate formed, can be calculated as follows:
$\dot{M} \approx 2.1\ (4.656 + 29.167) \approx 71.0$ kg/h
It must be noted that each product has its own specific heat.

Specific heat c	$\frac{\text{kJ}}{\text{kg K}}$
Water	4.190
Milk	3.936
Mash	3.894
Jam	1.256
Wax	2.931
Iron	0.502
Fats	0.670
Rubber	1.424
Saline solution, saturated	3.266
Sulphur	0.754
Alcohol	2.428
Air	1.005
Machine oil	1.675
Petrol	2.093

Further properties of substances can be found in the GESTRA Guide or in the applicable specialist literature.

12.1.3 If the size of the heating surface and the temperature rise (difference between initial and final temperature) of the product are known, the condensate flowrate $\dot{M}$ can be calculated with sufficient accuracy as follows:

$$\dot{M} = \frac{F \cdot k \cdot \left(t_D - \frac{t_1 + t_2}{2}\right)}{r} \cdot \frac{3600}{1000}$$

Where

$\dot{M}$ = amount of condensate in kg/h
F = heating surface in m^2

k = coefficient of overall heat transfer in $\left[\frac{W}{m^2\,K}\right]$

t_D = temperature of steam
t_1 = initial temperature of product
t_2 = final temperature of product (quite often, it is sufficient if the average temperature is known, e.g. room temperature)
r = latent heat in kJ/kg (as an approximation for medium pressures, 2100 can be assumed)

A few empirical values for the coefficient of overall heat transfer k are given below.
The lower values apply to very unfavourable operating conditions (such as low flow velocity, viscous product, contaminated and oxidized heating surfaces), whereas the higher values apply to very favourable conditions (e.g. high flow velocity, highly fluid product, and clean heating surfaces).

	$\left[\frac{W}{m^2\,K}\right]$
Insulated steam line	0.6 – 2.4
Non-insulated steam line	8 – 12
Heating unit with natural circulation	5 – 12
Heating unit with forced circulation	12 – 46
Jacketed boiling pan with agitator	460 – 1500
As above, with boiling liquid	700 – 1750
Boiling pan with agitator and heating coil	700 – 2450
As above, with boiling liquid	1200 – 3500
Tubular heat exchanger	300 – 1200
Evaporator	580 – 1750
As above, with forced circulation	900 – 3000

12.2 Sizing of Steam Traps

(See also Sections 3.1 and 3.2)

The formulae given in Section 12.1 above make it possible to calculate the average amount of condensate formed during the entire heating process. However, these formulae show clearly that, other conditions being equal, the amount of condensate increases with the difference between the steam temperature and the temperature of the product. This means that the condensate flowrate is largest when the product is at its lowest temperature, i.e. at start-up.

A further point is the fact that the pressure drop in the steam line and the heat exchanger is highest when the steam consumption is largest. This means that the service pressure and consequently the differential pressure (difference between inlet and outlet pressure of the trap), which determines the capacity of the trap, are lowest at start-up.

Extreme conditions are, for example, encountered in the case of steam line drainage. If saturated steam is used, the quantity of condensate formed at start-up may be twenty times that formed in continuous operation. If superheated steam is used, there is practically no condensate formed during continuous operation.

Very high flow and pressure fluctuations also occur in controlled plants and in many boiling processes.

If only the mean steam consumption (condensate flowrate) is known, a safety factor has to be added, at least with the use of float traps. Their maximum capacity at medium pressures (at a condensate temperature of 100 °C) can be assumed to be 1.4 times that of the hot-water capacity indicated in the capacity chart.

The maximum capacity of thermostatic traps (cold-water capacity) on the other hand is several times their hot-water capacity, and is given in the corresponding capacity chart.

Page

13. Pressure and Temperature Control

13.1	Pressure Control	125
13.2	Temperature Control at the Heat Exchangers	128
13.2.1	Control on the steam side	128
13.2.2	Control on the condensate side	129

13. Pressure and Temperature Control

13.1 Pressure Control

The boiler pressure is often higher than the pressure required for the corresponding heating process. In such cases, it is generally more economical to reduce the steam pressure. The purchase price for low-pressure heat exchangers is lower, the amount of latent heat that can be utilized is higher, and the amount of flash steam is lower.

13.1.1 In most cases, the control accuracy of a proportional controller, as shown in Fig. 84, is sufficient. It is a balanced single-seat valve operating without auxiliary energy. The reduced pressure acts via the water-seal pot and the sensing line on the lower side of the diaphragm.
The force of the spring acts in the opposite direction. It is adjusted with the setting wheel and determines the reduced pressure.

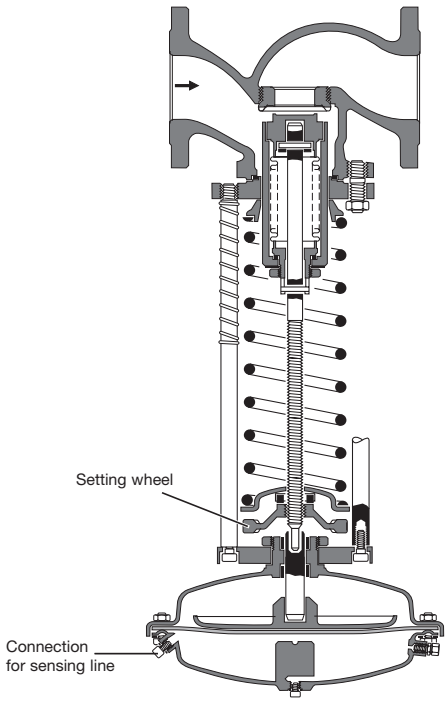

Fig. 84 GESTRA pressure-reducing valve

13.1.2 Correct installation is important for proper function of the pressure-reducing valve (Fig. 85).
Pressure-reducing valves operate for most of time in the throttled position. Even small dirt particles may therefore lead to trouble. Every pressure-reducing valve, no matter what type, should therefore be protected by a strainer. Water particles entrained in the steam passing through the strongly throttled valve at high velocity will, through cavitation and erosion, cause premature destruction of the seating surfaces.
Also, when the plant is shut down, the remaining steam condenses in the pipeline. The condensate collects at the lowest point upstream of the pressure-reducing valve. At start-up, the steam flows across the cold condensate.
Waterhammer may result, and the resulting shock may lead to premature failure of the regulating membranes and the pressure-balance bellows. For these reasons, the steam line upstream of each pressure-reducing valve should be drained. If the line downstream of the reducing valve rises, a second drain point should be provided downstream of the valve.
Drainage immediately upstream of the valve can be omitted if it is installed in a vertical line with upward flow.

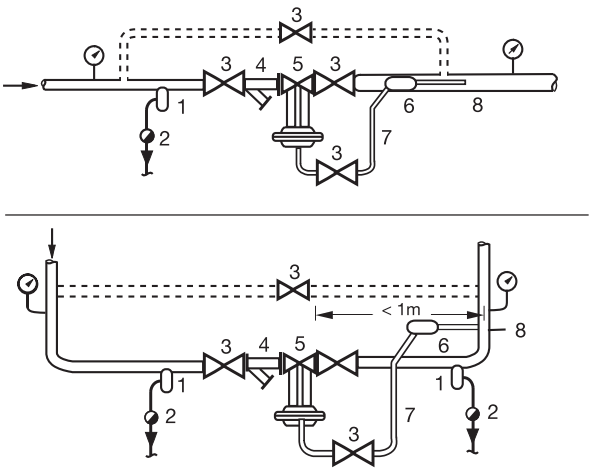

1. Condensate collecting point
2. Steam trap
3. Stop valve
4. Strainer
5. Pressure-reducing valve
6. Water-seal pot
7. Sensing line
8. Sensing point

Fig. 85 Examples for installation of steam pressure-reducing valves

Examples for the correct installation of pressure-reducing valves are given in Fig. 85, whereby for the valve according to Fig. 84 it is recommended that the sensing point is approximately 1 m downstream of the valve to allow the flow to stabilize.

13.1.3 If the pressure drop is relatively high ($P_2 < P_1/2$), it is recommended that a valve with a perforated plug be used, operated by an electrical or pneumatic actuator. If this is not possible, two pressure-reducing valves can be connected in series (see Fig. 86). The steadying zone upstream of the first pressure-reducing valve should be designed with a length of 8 x DN. The damping line should have a length of 5 m.

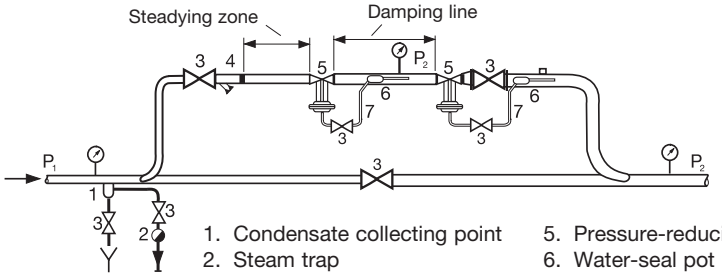

Fig. 86 Series-connected pressure regulator for the stepped reduction of high steam pressures

The most favourable reduction relationship is obtained for the two valves when the second is dimensioned to be two nominal sizes larger.
The same applies for the downstream pipeline.

13.1.4 If the steam pressure fluctuates greatly between the minimum and maximum values and if the pressure is to be regulated precisely even for minimum demand, two valves of differing size must be connected in parallel (Fig. 87)

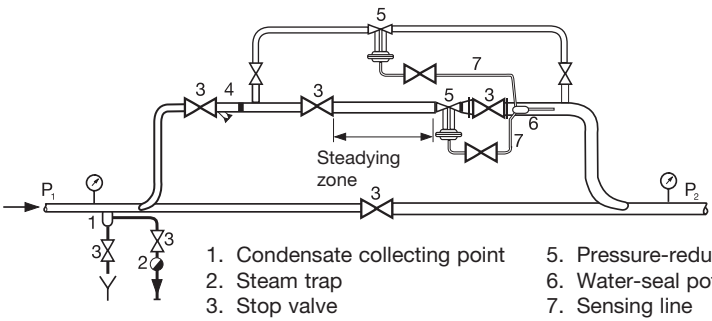

Fig. 87 Parallel-connected pressure regulators for strongly fluctuating steam consumption

The larger valve must be adjusted so that it closes at a slightly higher reduced-pressure than the smaller one. This ensures that both pressure regulators are open at full load. At low load, the reduced pressure increases a little, so that the larger valve closes and the smaller one alone performs the task of pressure regulation.

13.2 Temperature Control at the Heat Exchangers

13.2.1 Temperature control is mainly applied to the steam side. A common temperature controller from the GESTRA product range that functions without auxiliary power is shown in Fig. 88. Here a thermostat measuring the temperature of the product transfers its pulses to a positioning cylinder that controls the throttling valve, which is closed when the desired temperature is attained.
For the steam trapping, it must be considered that, due to the opening and throttling of the control valve, the steam pressure in the heat exchanger fluctuates constantly within a wide range (see also Section 4.7).

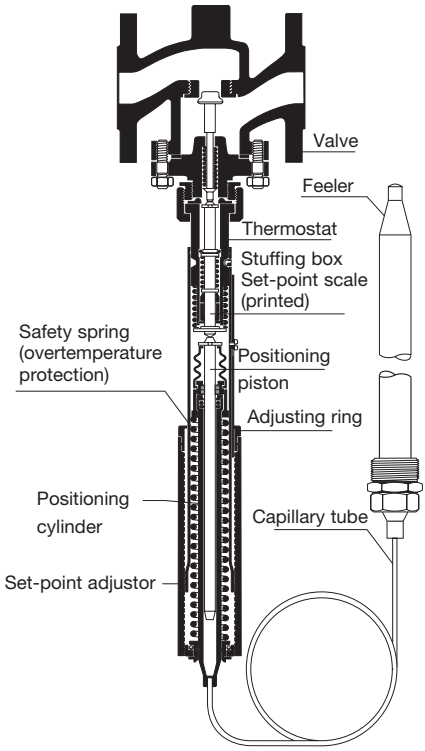

Fig. 88 Self-acting temperature controller. Thermostat with rod feeler and two-way closing valve (single-seated valve, closes with increasing temperature).

13.2.2 Control on the condensate side (see Section 4.8.3 and Fig. 38) offers the advantage that a constant pressure is maintained in the heat exchanger. At the same time, it is possible to utilize the sensible heat of the condensate. However, in comparison to control on the steam side, a noticeably more sluggish operation (overshooting) must be taken into account. Furthermore, heating surfaces that are unaffected by waterhammer (e.g. vertical preheaters) must be provided.
For control on the condensate side, the valve shown in Fig. 88 can also be used, with the valve arranged on the condensate side. A steam trap must be fitted between the heat exchanger and the valve. This is required to prevent the loss of live steam when the valve is fully open (e.g. on start-up of the plant).

Control on the steam side

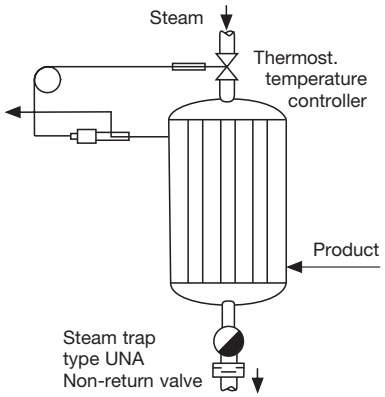

Depending on the load, the pressure in the heating space will vary.
No banking-up of condensate.

Control on the condensate side

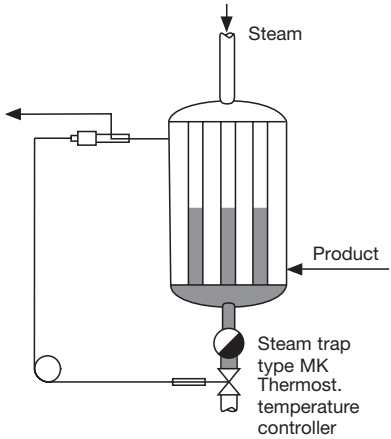

Constant pressure in the heating space.
Varying amounts of condensate accumulation, depending on load.

Fig. 89 Control of heat exchangers

Page

14. The Advantageous Use of GESTRA DISCO Non-Return Valves 133

15. GESTRA DISCO Dual-Plate Check Valves 137

14. The Use of GESTRA DISCO Non-Return Valves

Non-return valves are important in steam and condensate systems. They contribute to the automation of the heating process, increase safety and may even replace an expensive valve.
The space-saving GESTRA DISCO design simplifies the use of such valves. With their extremely short face-to-face dimensions, valves of the type RK are simply sandwiched between two flanges. Figs. 90a and 90b below illustrate their operation and installation.

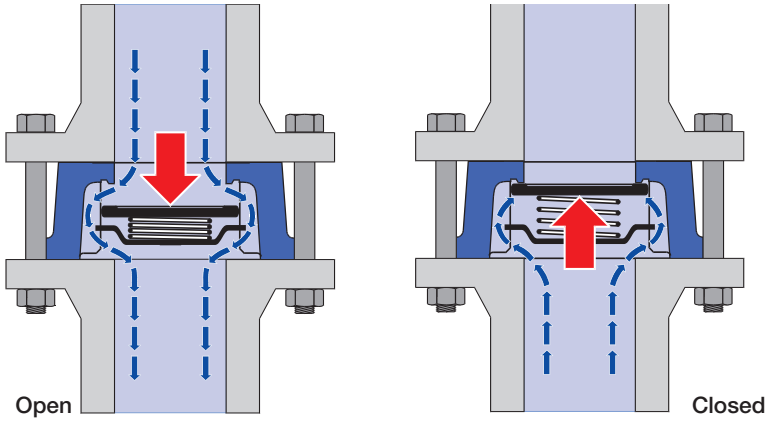

Fig. 90a The valves are opened by the pressure of the fluid and closed by the integral spring as soon as the flow stops – before any back flow occurs. The valve spring can also prevent gravity circulation, if required.

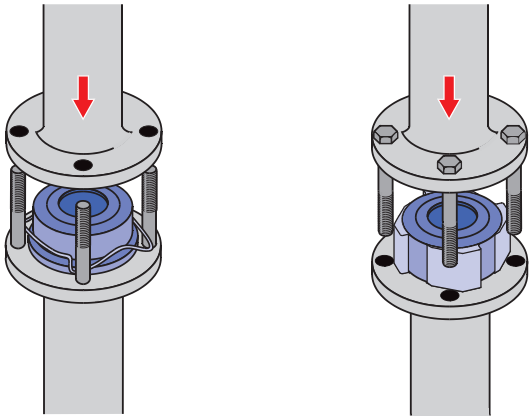

Fig. 90b DISCO-RK, PN 6 – 40, DN 15 – 100 with spiral centering ring or body centering cams for sandwiching between pipe flanges to DIN, BS or ASME 150/300 RF.

14.1 If heat exchangers are installed in parallel, non-return valves prevent heating and filling up of a user from the condensate side when the user has been shut down (prevention of waterhammer at the next start-up) (Fig. 91).

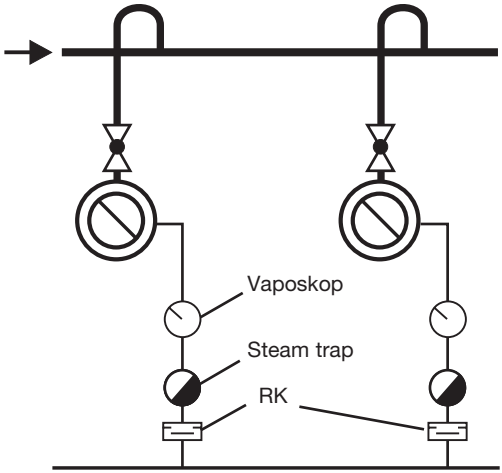

Fig. 91

14.2 Preventing the formation of vacuum in the steam space:

a) By fitting an RK in parallel with the steam trap. The RK will open as soon as the pressure in the steam space drops below that in the condensate line (see Fig. 92). Note: Only meaningful for vertical heat exchangers.

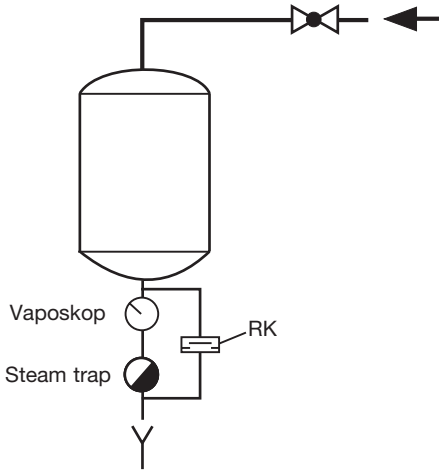

Fig. 92

b) By fitting an RK in parallel with a thermostatic air vent or even by itself, as shown in Fig. 93. The RK will open as soon as the pressure in the heat exchanger drops below atmospheric pressure.

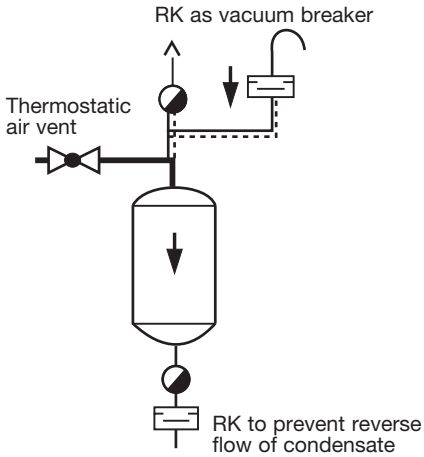

Fig. 93

c) By fitting a non-return valve at a flash vessel (see Fig. 94).

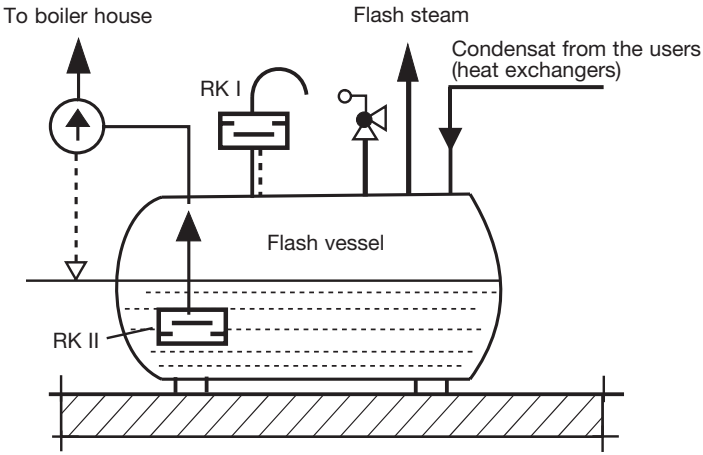

Fig. 94 **RKI: Vacuum breaker**
RK II: Pump foot valve

14.3 If one coil is used for heating and for cooling, the installation of RKs protects the plant against damage caused by operating errors (see Fig. 95). Here steam cannot enter the cooling water line nor cooling water the steam line.

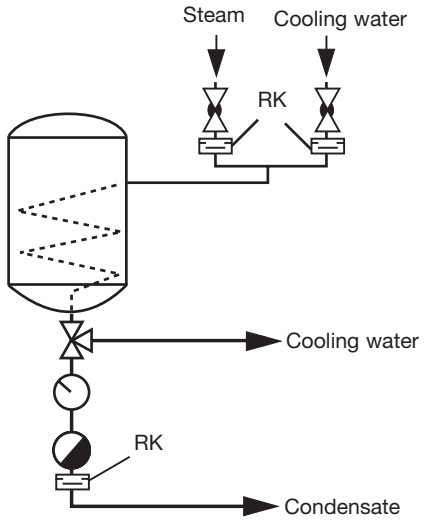

Fig. 95

15. GESTRA DISCOCHECK® Dual-Plate Check Valves BB

These GESTRA valves are a logical extension of the GESTRA DISCO non-return valves, e.g. in the range of larger sizes.
Their special advantages include extremely low flow resistances, short overall lengths, e.g. to DIN API, ISO and EN up to “extremely short versions”, and a wide range of materials for practically all media. The GESTRA DISCOCHECK dual-plate check valves of the type BB are designed for an especially long service life and extremely low pressure drops.

Closing position
The valve plates – with metal-to-metal or O-ring sealing – make even contact with the seat.

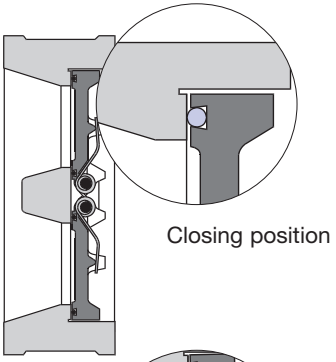

Starting to open
The opening process begins with the hinge sides of the plates first lifting off the centre pin, thereby reducing wear of the seating surfaces by the kinematic effect.

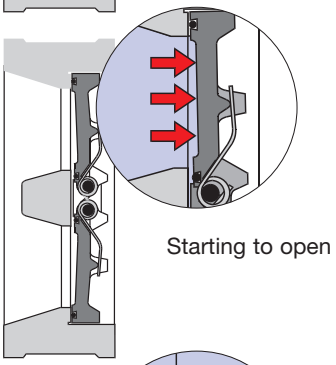

Valve fully open
The rotary movement of the plates is limited to 80° by stop lugs. Additional stop lugs at the hinge ensure a stable position of the plates when fully open.

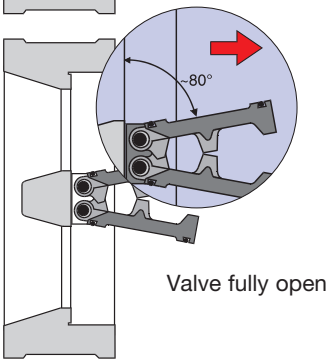

Fig. 96 Functional principle of the GESTRA DISCOCHECK dual-plate check valves BB

Page

16. Valves for Special Purposes

16.1	Condensate Drain Valve AK 45	141
16.2	Steam Traps for Sterile Applications, SMK for the Pharmaceutical Industry	145
16.3	Pump Steam Trap UNA 25-PK	147
16.4	Condensate Lifter UNA 25-PS	149

16. Valves for Special Purposes

16.1 Condensate Drain Valve AK 45

When steam-heated plants are taken into operation, the incoming steam condenses very quickly but the pressure only builds up slowly. In the process, a relatively large quality of condensate is produced but the existing steam trap is not yet able to discharge this start-up condensate without banking up. This prolongs the start-up time. Dangerous thermal waterhammer can occur.
When a plant is shut down, the residual steam condenses. The pressure drops and a vacuum may result. There may be negative consequences:

- Deformation of the heating surfaces by vacuum
- Increased downtime corrosion and danger of freezing through residual condensate
- Waterhammer on start-up

Remedy:
Start-up drainage, evacuation and vacuum-breaking should be provided in addition to the steam trap. This can be done with manually operated valves, but is better effected automatically with the GESTRA drain valve AK 45 (see Fig. 97).

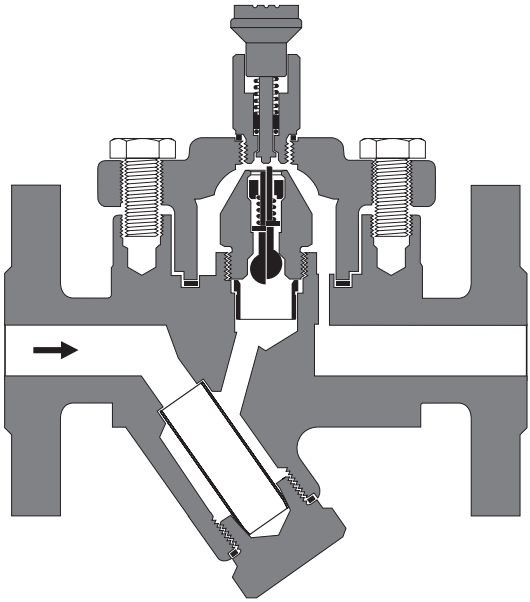

RHOMBUS line®

Fig. 97 AK 45, DN 15, 20, 25

Automatic drainage offers the following benefits in relation to manual draining:
- Labour-saving
- Excludes human error or negligence
- Prevents steam losses by open valves
- Prevents waterhammer and frost damage
- Reduces the risk of accidents at poorly accessible points
- Averts the need for an air-inlet valve

The functional principle of the GESTRA AK 45 is based on a pressure-controlled seal plug. When there is no pressure, the AK 45 is held in the open position by a spring. When the plant is taken into operation, the condensate can drain freely out of the plant. Only when a certain steam pressure is reached (the closing pressure) does the valve close automatically. If the plant is shut down, causing the pressure to drop, the AK 45 opens at about the same pressure as the closing pressure in the start-up phase (i.e. opening pressure = closing pressure).
A hand purging knob is provided, so that the AK 45 can be opened manually with the system under pressure to clear any deposits from the valve seat area.

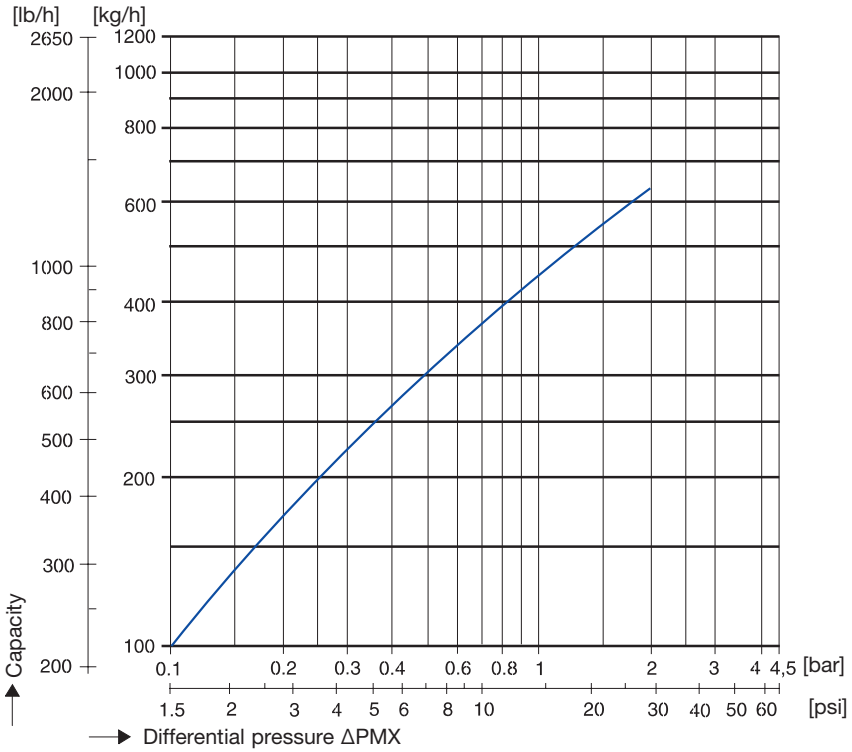

Fig. 98 AK 45 capacities for cold condensate

When taking a steam line which has risers into service (e.g. a remote steam line), the steam trap is not able to discharge the condensate which is generated on start-up. Through friction between the two phases, the steam entrains the cold condensate and transports it into the rising part of the line. Pulsation and thermal waterhammer can result. Here too, the GESTRA AK 45 can provide the solution (Fig. 99).

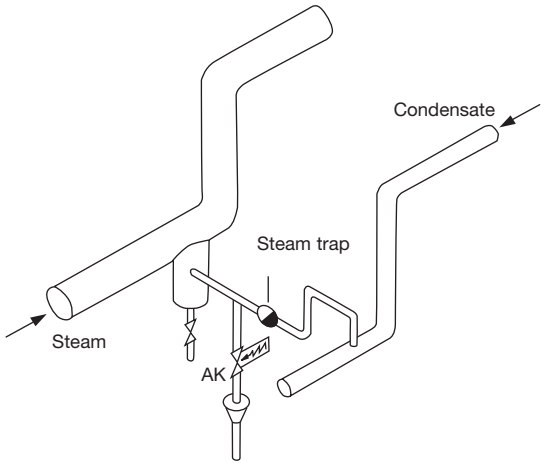

Fig. 99 Installation example for AK 45

For heat exchangers operating in batch mode (e.g. boiling apparatus, autoclaves or evaporators), fast start-up and shut-down with frequent batch changes is required. The GESTRA AK 45 permits rapid start-up, because the condensate produced at start-up can be discharged freely. Waterhammer can no longer occur. When the plant has been shut down, the GESTRA AK 45 allows the residual condensate to drain, thereby preventing frost damage and distortion through the formation of vacuum and also reducing the downtime corrosion (see Fig. 100).

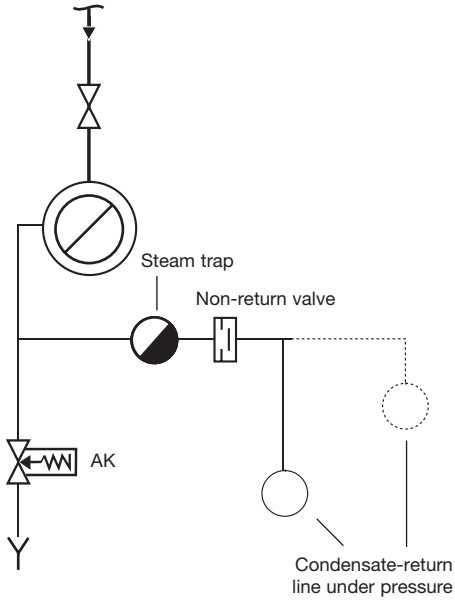

Fig. 100 Installation example for AK 45

16.2 Steam Traps for Sterile Applications, SMK for the Pharmaceutical Industry

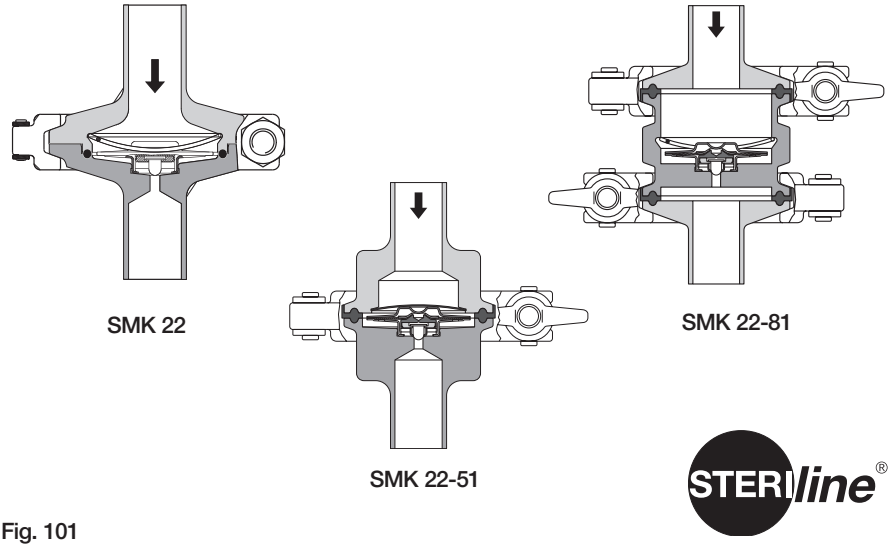

Fig. 101

This thermostatic steam trap features a minimum of stagnant area and a corrosion-resistant membrane regulator unaffected by waterhammer, and is used for the discharging of condensate and the venting of steam in sterile and aseptic applications (SIP).
Reliable sterilization is safeguarded through rapid heating and drainage with absolutely no banking-up during the sterilization process. The try-clamp (a jointed clamp) permits easy maintenance of the SMK.
The membrane regulator has a self-centering valve cone that can move freely, thereby ensuring steam-tight shut-off unimpaired by particulate matter.
High sensitivity, thanks to reduced dimensions of the regulator (evaporation thermostat). Automatic air-venting and immediate discharge of condensate without any banking-up over the entire rated pressure/temperature range. The opening temperature is 5 K below the boiling point.
Maximum differential pressure $\Delta p = 6$ barg.
All parts in contact with the fluid are of stainless steel. The body gasket is of EPDM (O-ring) in accordance with the regulations specified by the Food and Drug Administration (FDA).
The surface roughness Ra of the wetted surfaces is ≤ 0.8 Nm.

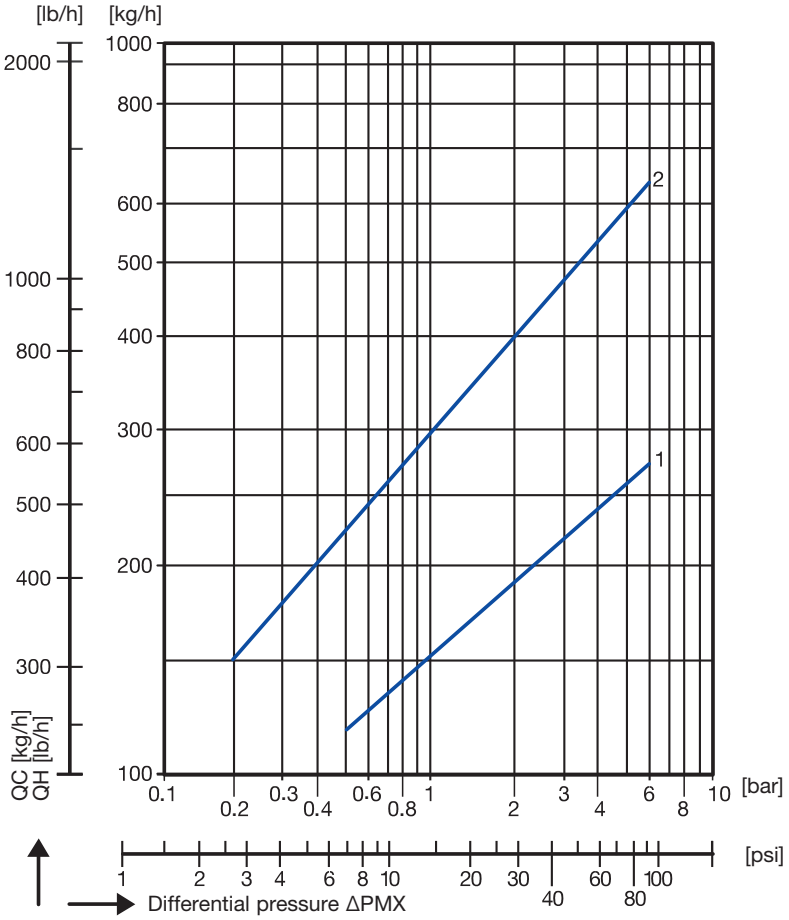

Fig. 102 Capacity chart for SMK 22 and SMK 22-51
1 Hot condensate
2 Cold condensate

16.3 Pump Steam Trap UNA 25-PK

Description

Ball-float operated steam trap with pumping function. The equipment works primarily as a steam trap.
An integrated pump function powered by motive steam ensures that the trap lifts and discharges condensate even if the steam pressure is low or back pressure is high. The control mechanism consists of a control unit with ball float and rolling ball valve, an orifice, a changeover linkage and a valve block for controlling the motive steam inlet and the vent outlet. The equipment features integrated inlet and outlet check valves, a connection for motive steam and a connection for a vent line or air balance line.

Function

The condensate flows through the integrated check valve into the trap body. The float operates the rolling ball valve as a function of the condensate level inside the trap body, thereby opening or closing the orifice. If the differential pressure is sufficiently high, the condensate will be discharged through the orifice and the check valve. The equipment works as a normal steam trap.
If, however, the differential pressure is not sufficiently high, the condensate level inside the trap body will continue to rise.
When the float reaches its upper tripping point, it will switch the valve block. In this valve block, the vent valve will be closed and the motive steam valve opened. The pressure now supplied by the motive steam forces the condensate out of the trap body. When the lower tripping point is reached, the position of the float will cause the valve block to open the vent valve and close the motive steam valve. Condensate flows again through the check valve into the trap body, and a new discharge cycle begins for the pump trap. During the pumping process, condensate collects in the supply line of the pump trap.

Flowrate (trapping mode)

Condensate (hot water)		
Flowrate [1)]	[kg/h]	2000
ΔPMX (max. differential pressure)	[bar]	6

1) If this flowrate is exceeded, the equipment will change into pumping mode.

Cold water		
Flowrate [1)]	[kg/h]	2500
ΔPMX (max. differential pressure)	[bar]	6

Flowrate (pumping mode)

Condensate (hot water) Flowrate at 6 bar motive steam pressure and 1 m supply head		
Flowrate	[kg/h]	460
PMOB (max. back pressure)	[bar]	1

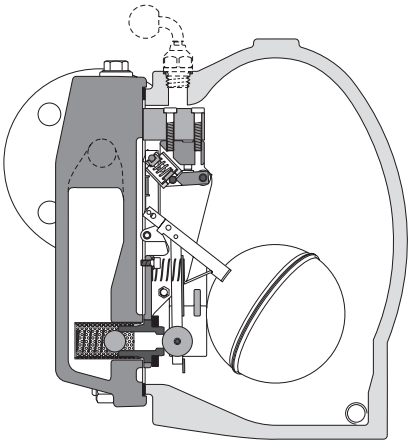

Fig. 103 UNA 25-PK

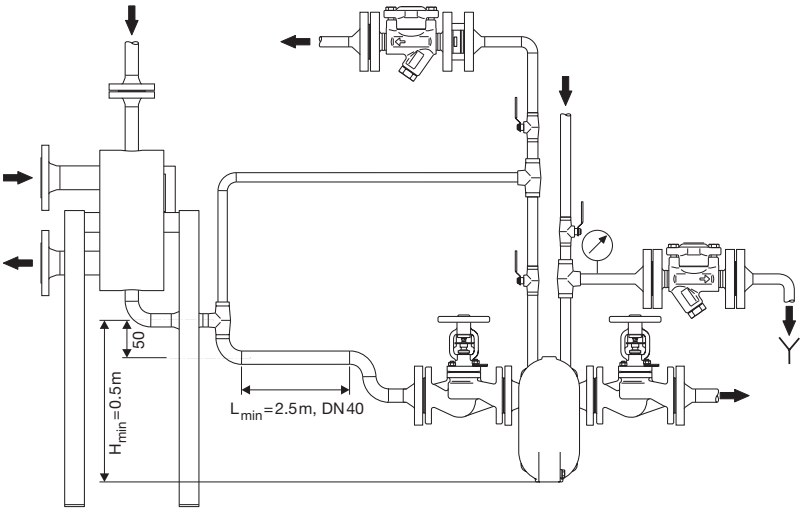

Connection of UNA 25-PK to a heat exchanger /
Connection of UNA 25-PS to heat exchanger or
condensate line with vent line returned (hot condensate,
supply not pressureless).

Fig. 104 Discharge of condensate with low differential pressures

16.4 Condensate Lifter UNA 25-PS

Description

Float-operated condensate lifter, designed for effective return of condensate. Steam is used as motive power for the operating cycle that displaces condensate out of the trap body.
The control mechanism consists of a control unit with ball float, a changeover linkage and a valve block for controlling the motive steam inlet and the vent outlet. The equipment features integrated inlet and outlet check valves, a connection for motive steam and a connection for a vent line.

Function

The condensate flows through the integrated check valve into the trap body. When the float reaches its upper tripping point, it will switch the valve block. In this valve block, the vent valve will be closed and the motive steam valve opened. The pressure now supplied by the motive steam forces the condensate out of the trap body. When the lower tripping point is reached, the position of the float will cause the valve block to open the vent valve and close the motive steam valve. Condensate flows again through the check valve into the trap body, and a new discharge cycle begins for the condensate lifter. During the pumping process condensate collects in the supply line of the condensate lifter.

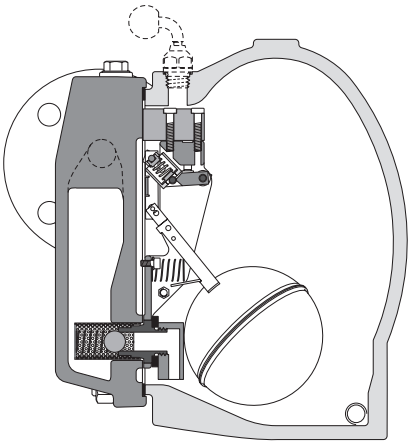

Fig. 105 UNA 25-PS

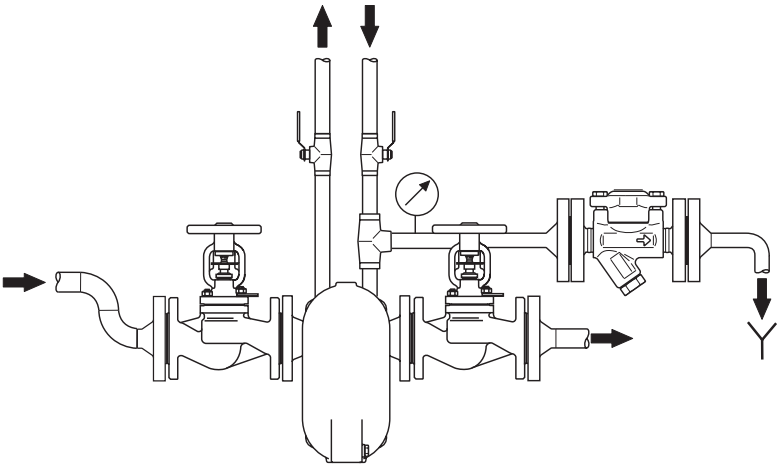

Connection of UNA 25-PS
(discharge to atmosphere,
supply pressureless, recovery of
highly undercooled condensates).

Fig. 106 Draining of heat exchanger with undercooled condensate

Symbols for Thermal Power Plants according to DIN 2481

Media and Lines

Steam

Recycle water,
e.g. condensate,
feedwater

Sensing line

Air

Line
with heating
or cooling

Intersection
of two lines
with junction

Branch point

Intersection
of two lines
without junction

Tundish

Discharge to
atmosphere

Boilers, Heat Exchangers and Equipment

Steam boiler

Steam boiler
with superheater

Desuperheater
with water injection

Steam converter

Heat exchanger with
cross flow

Separator

Flash vessel

Steam user without
heating surface

Steam user with
heating surface

Boilers, Heat Exchangers and Equipment

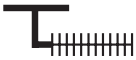
Space heating

Open tank

Vessel, general

Vessel with dished end

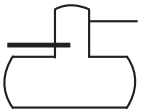
Vessel with deaeration

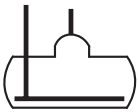
Steam accumulator

Steam trap

Vaposcope

Machines

Steam turbine

Electric motor, general

Liquid pump, general

Compressor, general (vacuum pump)

Valves

Shut-off valve, general

Shut-off valve, manually operated

Shut-off valve, motorized

Shut-off valve, solenoid-operated

Shut-off valve, piston-operated

Valves

Shut-off valve, diaphragm-operated

Shut-off valve, float-operated

Valve

Angle valve

Spring-loaded safety valve

Pressure-reducing valve

Gate valve

Cock

Three-way cock

Check valve

Swing check valve

DISCO non-return valve RK

Butterfly valve

Instruments

Pressure gauge, general

Thermometer, general

Flowmeter, general

Liquid level

Conductivity

pH meter

Control Equipment

Controller, general

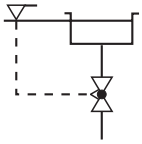

Drain controller

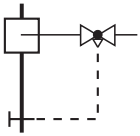

Desuperheater with water injection and temperature controller

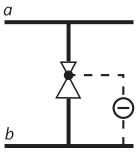

Pressure-reducing valve opens with decreasing pressure in line b

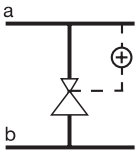

Pressure-reducing valve opens with decreasing pressure in line a

International Symbols and Abbreviations

	Symbols
Process lines	
Steam	
Water	
Air	
Instrument lines	
Lines, general	
Capillary systems	
Pneumatic signalling lines	
Electrical signalling lines	
Circular symbols for equipment	
Locally fitted	
Panel mounting	
Rack mounting	

Letters used in multi-letter symbols

as first letter		as successive letters	
C	Conductivity	A	Alarm
D	Density	C	Control
F	Flowrate, quantity	D	Difference[1]
H	Hand (manual operation)	G	Gauge (sightglass)
L	Level	I	Indicating
M	Moisture	R	Recording
P	Pressure	S	Switching[2]
S	Speed, velocity, frequency	T	Transmitter
T	Temperature	V	Valve

[1] PD = pressure difference; TD = temperature difference etc.
[2] S = Switch (switching) can also mean Safety.

Example for the composition and meaning of a multi-letter symbol:
The quantity to be measured, e.g. pressure (P), is to be indicated (I) and controlled (C).
Then PIC 110 means: Pressure Indicating Controller for control circuit 110.

Material Designations

Old material designation (DIN)		EN designation
Brief name	Number	Brief name
GG-25	0.6025	EN-GJL-250
GGG-40	0.7043	EN-GJS-400-15
GGG-40.3	0.7043	EN-GJS-400-18-LT
GTW-40	0.8040	EN-GJMW-400-5
RSt 37-2	1.0038	S235JRG2
C22.8	1.0460	P250GH
GS-C 25	1.0619	GP240GH
15 Mo 3	1.5415	16Mo3
GS-22 Mo 4	1.5419	G20Mo5
13 CrMo 4 4	1.7335	13CrMo4-5
GS-17 CrMo 5 5	1.7357	G17CrMo5-5
G-X 8 CrNi 13	1.4008	GX7CrNiMo12-1
G-X 6CrNi 18 9	1.4308	GX5CrNi19-10
G-X 6CrNiMo 18 10	1.4408	GX5CrNiMo19-11-2
X 6 CrNiTi 18 10	1.4541	X6CrNiTi18-10
X 6 CrNiNb 18 10	1.4550	X6CrNiNb18-10
G-X 5 CrNiNb 18 9	1.4552	GX5CrNiNb19-11
X 6 CrNiMoTi 17 12 2	1.4571	X6CrNiMoTi17-12-2
G-X 5 CrNiMoNb 18 10	1.4581	GX5CrNiMoNb19-11-2
CuZn 39 Pb 3	2.0401	CuZn38Pb2
CuZn 35 Ni 2	2.0540	CuZn35Ni3Mn2AlPb
G-CuAl 9 Ni	2.0970.01	CuAl10Ni3Fe2-C
G-CuSn 10	2.1050.01	CuSn10-Cu
GC-CuSn 12	2.1052.04	CuSn12-C

[1] Note the differences in chemical and physical properties!

EN designation Number	ASTM Equivalent material[1)]	Category
EN-JL 1040	A 126-B	Grey cast iron
EN-JS 1030	A 536 60-40-18	S.G. (ductile) iron
EN-JS 1025	–	S.G. (ductile) iron
EN-JM 1030	–	Malleable cast iron, white
1.0038	A 283-C	Structural steel
1.0460	A 105	Forged steel, unalloyed (carbon steel)
1.0619	A 216-WCB	Cast steel (carbon steel)
1.5415	A 182-F1	Forged steel, heat resistant
1.5419	A 217-WC1	Cast steel, heat resistant
1.7335	A 182-F12-2	Forged steel, heat resistant
1.7357	A 217-WC6	Cast steel, heat resistant
1.4008	–	Cast steel, stainless
1.4308	A 351-CF8	Stainless steel (casting), austenitic
1.4408	A 351-CF8M	Stainless steel (casting), austenitic
1.4541	–	Stainless steel (forged), austenitic
1.4550	A 182-F347	Stainless steel (forged), austenitic
1.4552	A 351-CF8C	Stainless steel (casting), austenitic
1.4571	–	Stainless steel (forged), austenitic
1.4581	–	Stainless steel (casting), austenitic
CW608N	–	Hot-pressed brass
CW710R	–	Brass
CC332G	–	Bronze
CC480K	–	Bronze
CC483K	–	Bronze

Index

	Page
A	
Acid baths	64
Air conditioning plants	49
Air heaters	49
Air humidifiers	50
Air vents (DISCO non-return valves RK)	133
B	
Band driers	65
Banking-up of condensate	31
Baths (for cleaning and pickling)	63
Boilers	50
Boiling pans	56
Brewing pans	59
C	
Calenders	62, 74
Cleaning machines	
- dry cleaning	75
Condensate drain valves	155
Condensate flowrates	
- in steam systems	118
- in compressed-air systems	101
Condensate-line sizing	107
Condensate-return systems	95
Convectors for space heating	46
Coppers	59
Counterflow heat exchangers	51
Cylinder drainage	62
D	
Digesters	55
Drainage	
- compressed-air lines	99
- pipes	43
Driers	43, 62, 65
Dry-cleaning machines	75
Drying cylinders, drying drums	62
Drying platens	66
E	
Evaluation criteria for steam trap systems	9
Evaporators	60
Examples of application	27

	Page
F	
Finned-tube heaters	46
Flash steam	
- amount	92
- recovery systems	93
Flow velocity in steam lines	112
Flowrates in pipelines	111
G	
Group trapping of heat exchangers	29
H	
Heat exchangers	43
Heaters	48
Heating coils	48, 63
Hot mangles	74
Hot tables	66
I	
Individual trapping of heat exchangers	29
Instrument tracing	78
Ironers	72
Ironing presses	72
J	
Jacketed tracing lines	77
L	
Laundry equipment	72
M	
Mash tubs	59
Monitoring of steam traps	83
Multi-platen presses	67
N	
Nominal size of pipework	107
Non-return valves	133
P	
Pans	55, 56
Preheaters	53
Presses	67-69, 72
Pressure control	125
Pressure drop in steam lines	109
Pressure-reducing valves	125

	Page
Principles of steam trapping	27
Process digesters	55
Process heat exchangers	53
Process pans	55
R	
Radiant panels	46
Radiators	46
S	
Saturated steam mains	
- drainage	44
Selection of steam traps	40
Sensible heat of condensate, utilization	91
Sizing	
- condensate return lines	107
- steam traps	121
- steam lines	107, 117
Stain-removing tables	72
Steam lines	
- drainage	43
- sizing	117
Steam mains	44
Steam manifolds	(46) 43
Steam radiators	46
Steam separators	43
Steam tables	114
Steam trapping	
- examples	27
- general principles	27
Steam traps	
- evaluation	9
- monitoring	83
- selection	10, 40
- sizing	121
- sterilizing steam	145
- systems	12
Steaming mannequins	73
Stills, Indirectly Heated	61
Superheated steam mains	45
Symbols	151-154

	Page
T	
Tank heating	79
Temperature control on the condensate side	128
Temperature control on the steam side	128
Temperature controllers	128
Tracer lines	76
Tube-type preheaters	53
Tyre presses	69
U	
Unit air heaters	47
Utilizing the sensible heat	91
V	
Vulcanizers	70
Vulcanizing presses	69
W	
Water separators	43
Waterhammer	32

GESTRA Product Overview

Steam Traps

- Thermostatic steam traps with Duo S.S. (bimetallic) regulator or membrane regulator
- Ball float traps
- Thermodynamic steam traps
- Steam trap units for universal connectors
- Condensate lifters
- Pump steam traps
- Steam traps for sterile applications and the pharmaceutical industry
- Steam trap monitoring equipment

Non-Return Valves

Gravity circulation checks
- DISCO® non-return valves
- DISCO® check valves
- DISCOCHECK® dual-plate check valves

Cooling-Water Control Valves

Self-acting proportional controllers regulate the cooling-water flow as a function of the discharge temperature.

Return-Temperature Control Valves

These directly controlled return-temperature control valves maintain the required return temperatures.

GESTRA Product Overview

Self-Acting Pressure Control Valves

Pressure reduction and maintaining of upstream pressures for use with steam, non-combustible and neutral gases, and liquids in all energy and process systems.

Self-Acting Temperature Control Valves

For controlling heating and cooling processes with steam, gas and liquids.

Control Valves

- Single-seat control valves with electric and pneumatic actuators
- Control valves with radial stage nozzle

Safety Valves

Strainers

Stop Valves

Special Equipment and Vessels for Heat Recovery

- Condensate recovery and return systems
- Desuperheaters
- Steam regenerators
- Feedwater deaerating plants
- Blowdown receiver (mixing coolers)
- Condensate dampening pots
- Air/steam driers

GESTRA Product Overview

Equipment for Energy Supply Centres

All components for improving operational safety and monitoring steam and pressurized hot water plants in accordance with EN 1295 und EN 12953

- Level control, limiting and monitoring
- Temperature control and limiting
- Conductivity monitoring
- Continuous and intermittent blowdown valves
- Program-controlled blowdown systems
- Liquid monitoring
- Flowmeters for steam
- Bus technology

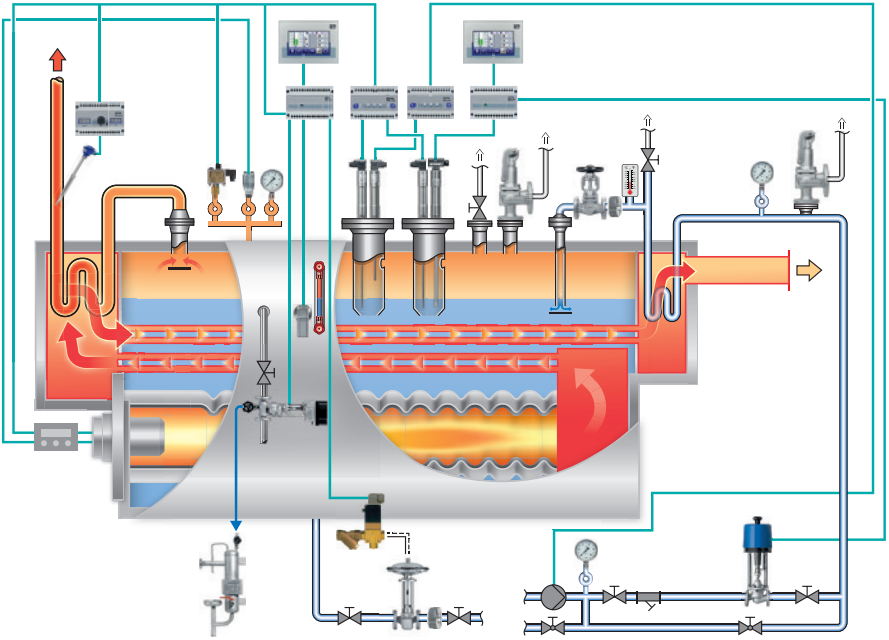

GESTRA AG

Münchener Str. 77 · 28215 Bremen · Germany
Postfach 10 54 60 · 28054 Bremen · Germany
Tel. +49 421 3503-0
Fax +49 421 3503-393
info@de.gestra.com
www.gestra.com

810580-10/02-2022cmp (808082-11) · GESTRA AG · Bremen
Printed in Germany · Technical modifications reserved